tu·be or not tu·be

Audio Dimensions, Inc.

© 1976

CONTENTS

CHAPTER	TITLE	PAGE
	INTRODUCTION	3
1	"PERFECTION?"	11
2	THE SOFTWARE: DISCS, TAPES AND TUNERS	19
3	TUBES vs TRANSISTORS	23
4	PREAMPLIFIERS: CANDIDATES FOR MODIFICATION	37
5	CIRCUIT COMPONENTS	43
6	TUBE PREAMPLIFIERS: CHARACTERISTICS AND OPERATION	61
7	PREAMP POWER SUPPLIES	77
8	PREAMPLIFIER CIRCUITS	91
9	STRAIN GAUGE AND MOVING COIL CARTRIDGES; TUBE APPLICATIONS	115
10	POWER AMPLIFIERS	125
11	MORE AMPLIFIER DATA	155
12	OTHER INTERESTING CIRCUITS	173
APPENDIX		
A	GUIDE TO SYSTEM OPERATION	183
B	RESISTOR COLOR CODE	186
C	SOURCES FOR TUBE-PECULIAR PARTS	187
D	SCHEMATIC SYMBOLS	189
E	NUVISTOR APPLICATIONS	190
BIBLIOGRAPHY		191

introduction

THE BOOK

This text was written by a multitude. Audiophiles around the world have contributed to its pages over the last three years; their ideas and practices have been correlated, refined, tested and retested, then combined with others and validated by the finest test equipment available, including the most dependable of all; the human ear.

The author has, for some years, acted as a clearinghouse for information on the practice of using vacuum tube equipment for the reproduction of sound. During that period, he has built over one hundred amplifiers and preamplifiers; his goal was the construction of equipment which met a rather demanding set of standards. Virtually every advertisement for high fidelity equipment claims "realism" as one of the virtues of the hardware offered; the claims for a $15 phonograph cartridge are almost identical to those for a cartridge system costing hundreds of dollars. The difference between a good speaker and a great one are subtle, as are the differences between any two pieces of expensive equipment. To the ear, however, only one criterion really matters; does it sound "real"? Therefore, the goal of the projects proposed by this text is the recreation of music, with the result being as close to the original performance as possible. If one pays less attention to the "numbers" (distortion, bandwidth, and power ratings) and more to the manner in which the sound is perceived, it is possible to fool the ear-brain system--and that should be the object of any fine music reproduction system.

Throughout this book, there appears a great deal of supposed technical information. It is expected that many readers will be far more technically qualified than the author, who is in many ways eminently unqualified to attempt such a profound text. In the academic world of today, however, little attention is paid to vacuum tubes, and modern technology assumes that tubes are anachronisms. Those "experts" who find fault with the arguments in this book may have an education in solid state electronics which far exceeds that of the author, but it is likely that they were given only a most cursory look at tube theory, probably as an introduction to the world of solid state.

This book may suffer from technical flaws, but it is the sound we are after, isn't it? TO THE EAR, the principles are valid and the techniques work.

THE ART

Since the first commercially successful sound reproduction system, man has steadily worked to reproduce more closely the original performance. At first, the economics of the situation seemed to be the driving factor; it was less expensive to listen to a reproduction than to attend a concert. In the 1970s, however, economics underwent a significant change. Though tickets and transportation increased in price, it become unlikely that the cost of a first rate audio system could be amortized, or written off, against money saved. As the price of equipment skyrocketed, it become obvious that factors other than entertainment were justifying the acquisition of fantastically complex and expensive music reproduction systems. "Acquisition" is an appropriate term, as any psychologist can explain. Many audiophiles are obviously more involved in the quest for equipment than in a search for talent and artistic performance. To some, audio has been reduced to a set of specifications for which improvement is constantly sought. Others count their knobs and switches, measuring a "system" by its complexity and pointing proudly at scope presentations and built-in power meters. Still others seem to relish the construction of components, and build kits or "scratch" units which, once complete, are seldom turned on.

There is a rare minority for which the equipment is a necessary evil. This group is less concerned with specifications than with the performance. A member of this group can be readily identified; when you enter his home he says "I've got a new DGG Rachmaninoff" rather than "...finally got a new crossover." Further identification is provided by an examination of the system he uses; it will consist of a mixture of old and new, and bear witness to the owner's buying principles: "If it breaks, fix it. If it can't be fixed, replace it." This sort of audiophile probably does not subscribe to hobbyist magazines except to read the record reviews. The constant claim to "state of the art" does not even rate a glance, since his equipment <u>works</u>.

Regardless of the criteria by which one judges a system, certain truths are inviolate. The purpose of the system, however simple or complex, is reproduction of sound. When the system is working, listeners seem to fall into one of two categories; the first group listens for the rosin on the bow, while the second is in rapture over the conductor's interpretation. The first group tends to assemble systems which are truly a sonic spectacle, capable of an 1812 Overture which breaks windows and leases. One means of identifying members of this category of listeners is to count the number of times a technical adjustment is made during the play of a record. A remote control is a dead giveaway, of course, even if it consists of a volume control. The other category of listeners is interested in the realism of the gestalt, of the "whole thing." It is seldom that a member of the audience at a symphony hears "the rosin

on the bow," since the most favored seats hear what the composer and conductor intend; the gestalt. The tympani, for instance, is usually heard from a distance of at least one hundred feet. Average sound pressure levels, at a live symphony, are less than 80 dB at a typical listening position, though peaks go much higher. The real purist is likely to be unhappy if an audio system makes the tympanis sound as though they were located within the loudspeaker, and may find 100 dB sound nearly painful.

One of the paradoxical truths about audio is that these various, apparently mutually contradictory, positions can be resolved. It is possible to build a system which will please, if not delight, everyone.

The key to attainment of such a goal seems to be accuracy. Even the audio pervert, who likes bass drum strokes to move furniture, is likely to be a bit awed when he closes his eyes and cannot differentiate between reproduced and live music.

It is necessary, then, to discover those clues which the ear-brain system uses in distinguishing between a reproduction and "the real thing." A few simple experiments rapidly indicate that the advertised claims seldom deal with the really important factors. As an example, frequency response is definitely not one of the clues used by the human body when deciding whether music is live. Proof is easy; consider the man with a serious hearing loss, a man who cannot hear above 8000 Hz. Despite his problem, it is difficult to "fool" his sensory system. Apparently, frequency response is not the most critical element of reproduced music. How about distortion? Two trumpets, by different manufacturers and played by different performers, have a different sound, but both will sound "live." Real time analysis, with good equipment, will prove that the major difference is in the distribution of harmonic content. In fact, it is likely that either of the two horns will produce a waveform which appears to be a distortion of the product of the other. Yet both sound live! Reproduction of a solo performance, accurate except for the presence of limited harmonic distortion, will probably not be distinguishable from a live performance. Intermodulation distortion is not a major factor in the reproduction of a single instrument. If IM figures are reasonably low, that type of distortion alone should not permit detection of the electronic process of reproduction of even large masses of instruments. In fact, there is a likelihood of IM in live performances, in the form of beat frequencies developed between colocated instruments.

Another highly touted characteristic of the "best audio" equipment is the residual noise level. It is a psychoacoustic fact that even quite high levels of hum and hiss are masked by the signal, and usually become evident only when specifically listened for. As for other types of noise--random pops and clicks, and a generally high background noise level--it is unlikely that

the poorest system will come close to the noise prevailing at a concert or discotheque.

If all these factors are eliminated as contenders for the chief "clue" used by the sensory system in detecting whether sound is live or reproduced, what is left? There is a means of identifying the elusive remainder: Assume a system which reproduces music over an extremely wide bandwidth, say 30 to 30 kHz, with low noise, and total distortion less than 1%. Listening to this unlikely system may or may not "fool" you, but it will certainly be a pleasant experience. At times, the system will probably sound extremely "live"; at other times it will not. If you could introduce a change which reduced the likelihood of fooling the senses, but did not change the bandwidth or distortion, it is probable that you would have found one critical characteristic. A dynamic compressor/expander, or "compander," might provide valuable insight as to just how the ear-brain system works. Used to expand the dynamic range of the program material, it is improbable that the music would seem "live" more often. Without a doubt, however, if it is used to compress the dynamic range, even slightly, you will know it immediately. This is one of the arguments used to support the candidacy of dynamic range as the sensory system's most important clue in identifying "live" music. The very best of the companders is capable of expanding only relatively gross transients. That is, transients lasting more than a few milliseconds or so would be expanded, while those of shorter duration would be missed. It is the presence or absence of these very short-lived transients which is of such critical importance. If they are lost in the various electronic processes, no expander can recreate them. If a few remain, however, a compressor will remove them from the program material, as will overload at any point in the audio chain. It is contended, then, that a major factor in the reproduction of music is the recreation of "fleeting transients" of incredible amplitude (compared to the rms value of the rest of the program). When these transients are cut off, or "clipped," the process might generate high order harmonics, which are another clue to electronic reproduction. Frequency response, distortion and noise levels are also important to the enjoyment of reproduced music. If, however, one wishes to fool the ear-brain sensory/processing system, it is critical that these short-lived transients be present.

One of the advantages of vacuum tube equipment is its inherently high overload point. Many a fine transistorized preamplifier, for instance, can be overloaded by a high output moving coil cartridge playing through a solid state subpreamp. The result can be elimination of many transients necessary to accurate reproduction. On the other hand, a properly designed thermionic (vacuum tube) preamp is virtually incapable of overload by any available cartridge. When a triode tube does "clip," it generates predominantly second harmonics, which are not unpleasant.

A simple test will indicate the transient handling status of a system. Select any of the test records which provide a band of pink or white noise. With a pin, or razor blade, lightly scratch the record across that band. When played, the scratch should be audibly higher in volume than the background hiss. With an oscilloscope, examine the output of the cartridge; conventional magnetic cartridges require a scope with high sensitivity. The trace should, between "pops," look relatively flat and of constant amplitude. When the stylus hits the scratch, the scope will display a pronounced peak. Measure the amplitude of the background noise, and that of the peak, and convert the two figures into a ratio. Once established, that ratio becomes a reference used in examining the remainder of the system. Next, look at the output of the preamplifier using the same technique. A comparison of the output from a quite expensive solid-state preamplifier with that from a common vacuum tube preamplifier indicates substantially more compression when the signal goes through the transistor chain. If the output of the preamp shows a transient/background ratio roughly equivalent to the reference figure, move on; otherwise, recompute the ratio. Examine the output of the electronic crossover, if used, but remember to add the HF and LF peaks. If no crossover is used, move onto the output of the amplifier. Finally, check the output of any passive crossover, again remembering to sum the signals of the LF and HF sections.

Another test which will provide a valid indication of the transient-handling capability of equipment involves a square wave generator and an oscilloscope. The more vertical the leading edge of a square wave (at about 5000 Hz), the more likely that "fleeting transients" will pass through the device being tested. The conventional procedure for rise time measurement requires careful calibration of the scope, and a time base. For the purposes of this text, relative changes--measured on an uncalibrated scope--are deemed sufficient. And the use of tubes, especially triodes, will make musical infidelities tolerable.

THE MARKET

A visit to any large audio emporium is sufficient to boggle the mind of the potential buyer of "components," particularly if he is making that critical transition from one of the commercial packaged units. The most influential factor in that decision seems to be friends, and the systems they have presented to our fledgling audiophile. A desire for "something better," and purchase of one or two audio magazines, have led this customer into the clutches of one of the most avaricious groups in our country; the audio sales force! The neophyte, armed with his latest buyers' guide, is fair game. He feels he knows a lot about a relatively unsophisticated subject, and probably already knows what sort of equipment he wants to buy. He is concerned with amplifier power, distortion figures, number of speakers and their sizes, rumble, wow, flutter, noise, and price. It would be difficult to convince him that a single eight-inch woofer and a small dome tweeter, in a well designed system, could sound more accurate than the MEGAHERTZ SPECIAL, with two big woofers and a five-way crossover. The MEGAHERTZ SPECIAL may seem a bargain when compared to the smaller unit, and will certainly sound more impressive when first heard in the store. It will have more bass and more "presence," will handle more power, and will be bigger. When the salesman explains that "these speakers are bought direct from the manufacturer; we have an exclusive on this line," he may be saying that the speakers are a house brand. If he argues that the larger speaker is cheaper because of a special marketing arrangment, "eliminating the middlemen," that is another tipoff. The best example of this sort of marketing is Apollo vs the FMI 80; no experienced audiophile would prefer the former product, which has a list price much higher than that of the smaller but more accurate FMI. In a competition between most house brand loudspeakers and the small EPI units, only the rock freak would fail to choose the relatively expensive EPI. The Advent loudspeakers compete directly in size and price with a multitude of house brands and obscure, "special arrangment," units, yet the difference in profit to the dealer leads many to recommend almost anything but the Advent, which is one of the best bargains on the market today.

The same principles apply to electronics, though to a lesser degree, simply because of the relatively strict advertising standards imposed by various consumer protection agencies. To avoid a direct confrontation with "audiophile" components, some retailers (Olson, Radio Shack, and others) offer only house brands plus a few sad examples of "fringe" products. Even a poor amplifier can be made to sound good when compared to a real piece of junk.

Cartridges offer yet another potential for rip-off. Only a small percentage of consumer cartridges are sold for "list price." A highly inflated list price has been imposed on the

most popular consumer cartridge produced by Shure; the M91ED, at about $55! Since this cartridge has been available for years at between $15 and $18 dollars to those "in the know," it is obvious that the $55 list price was created to permit a larger "discount" of package systems including that cartridge. If the same approximate ratio of list and discount prices were to apply to the $75 V15III an "audiophile" rather than "consumer" product, that relatively good cartridge would sell for less than $25! A similar situation exists with other cartridges, including ADC, Pickering, and more.

Caveat emptor never applied more than in the audio field; only automobiles and desert lots are sold with more hustle than a house brand package system in your local "discount" stereo emporium.

The experienced audiophile has probably already learned (painfully) about most of the more common deceptions in this field, and--by virtue of his reading this book--is likely to remember the advent of transistors in the hifi store. No technological "advance" to audio equipment was ever accompanied by more fanfare! Many Dyna, Marantz, and McIntosh owners were immediately persuaded to trade for solid state, and never understood why they found themselves listening to music for shorter and shorter periods of time. The incisive, detailed quality of transistor sound was very attractive in the store, even when compared directly with the somewhat more liquid, softer sound of tube technology in the early sixties.

Today's tube technology is able to provide products with most of the sonic advantages of transistors, except for some of the very basic differences (life expectancy, heat, bulk, and power consumption). The sonic comparison is remarkable, since most serious listeners rate tube equipment as substantially more accurate than transistor counterparts. Since tube devices generally cost more to manufacture than solid state items, there is a marketing problem; most vacuum tube components cost substantially more than comparable transistorized equipment. When the audiophile is faced with a vacuum tube amplifier and solid state amplifier at the same price, he will discover a tremendous difference in specifications. The tubed unit will be larger, heavier, and will have far less power, more distortion, consume more power, and will present a continuous problem of tube replacement. The decision to buy the tubed unit will often result only from exhaustive listening, which most stores are unable to permit. Though it has been said that "ownership of any piece of audio equipment is typically a transient state," it is unfortunate that we must learn our lessons so painfully. A Marantz 8b amplifier, of only 35 watts per channel outpower power, sold in 1963 for only $264; a good used 8b is worth more than that today! To build an 8b on a commercial basis today would require an ultimate retail price of over $700; that figure

buys a lot of transistorized watts. Since the majority of equipment is bought during a lengthy transition process from a Sears "stereo compact" to true audiophile equipment, that process can be quite expensive unless something happens to reduce the number of steps taken from one extreme to the other. It is worth arguing that the actual cost of a good Audio Research system should include the dollars wasted in learning enough to buy one! Steadfast owners of old Marantz, Citation and Scott equipment must chuckle if they bother to read the advertisements prevailing today. The most overworked term in audio, "state of the art," simply has no meaning to them. They take pity upon the man carrying a box marked "Supertuner MKII" from a store, who sees cases of MKIIIs being unloaded from a truck.

There is a lot of evidence to indicate that it is possible to stay with a given assembly of electronic components for many years, making modifications as technology, time and expertise permit. One important piece of evidence is a pair of Marantz 9 amplifiers, which were recently modified in San Diego. The result has been favorably compared to (literally) the most expensive amplifiers on the market today, both solid state and vacuum tube. Vacuum tube technology can be applied to virtually any signal processing problem, including peripheral functions such as dynamic expansion/compression, noise reduction, and equalization. For the most part, when these functions are required, they can be better performed by solid state devices. Accordingly, this text will concentrate on tube amplifiers, preamplifiers, and power supplies of other devices. The basic contention is that the functions of voltage amplification, power amplification, and frequency division can be performed (absolutely) better with vacuum tubes than by transistors, and (relatively) more cost effectively with modifications than through purchase of new equipment.

chapter one

'perfection'?

To establish realistic goals for any equipment modifcation proposal, it is first necessary to define perfection. Obviously, the goal of any modification program must lie somewhere on the line between current status and that sublime, unattainable state to which every manufacturer lays claim in his latest advertisement. The term "state of the art" (SOTA) attempts to describe the distance along that line that technology (and application) has moved. Unfortunately, SOTA for a particular parameter, or form of distortion, may be found in an otherwise unacceptable piece of equipment. Claiming SOTA status for a parameter such as harmonic distortion, then, is not valid. It is far more realistic to establish SOTA for a general function rather than for a single desired characteristic.

The search for "sonic perfection" has, in the minds of a series of inventors, been successful many times over the last one hundred years. An early mechanical phonograph used a friction device to transmit energy from a rotating drum to a diaphragm, and controlled the friction by means of a stylus/string arrangement. Claims for this mechanical amplifier rivalled those for another device intended to produce the same end result. The latter product used a supply of air pressure attached to a horn through a metering valve, and used the stylus to modulate the airflow, thus producing sound. Except for the ever-present hiss, this was certainly near perfection for its day. The term

"perfection," then, is apparently subject to interpretation and is not nearly as absolute as one would like to think. For the purposes of this text, however, "perfection" will be clearly defined.

The perfect phonograph cartridge should convert the modulations of the disk groove into an exact electric analog, with zero wear of the disc and zero spurious signal content. This seems valid, but has little to do, apparently, with the way a real cartridge sounds. This conclusion can be reached by comparing the sonic characteristics of two cartridges with identical technical characteristics; in some cases, two cartridges, by the same manufacturer, with sequential serial numbers, will sound quite different.

The technical data published by the many cartridge manufacturers asserts that each of them have at least one product which is SOTA. The only thing these cartridges have in common is that claim, it appears, since there are many principles involved, including moving magnet, moving coil, moving shunt (variable reluctance), electret, strain gauge, piezoelectric, and variable capacitance. It is possible to find an example of each principle which has nearly the same technical statistics as the others, yet the resulting sound will vary significantly. One means of determining "state of the art" is to study the signal before it is impressed on the record (using the master tape, perhaps) and compare it to the signal produced by the cartridge. Though this procedure ignores the aberrations of a long string of electronics, a cutting head, and the disc itself, one would expect that the cartridge which produces a signal electronically closest to that on the master tape is the most nearly perfect transducer. This is, unfortunately, not the case. The perceived effect of each type of deviation must be weighed, of course. The problem is determining the scale of values for each variation from perfection. The obvious answer--the sound--requires a subjective judgement, which is invalid as long as there are two audiophiles present. As a result of these arguments, which apply equally to virtually all components, we must conclude that it is not the oscilloscope which must be satisfied, but the specific listener whose opinion determines the relative merit of a device. If we assume that all really good cartridges are nearly perfect, and try to identify those aberrations which are least tolerable, it becomes possible to separate the wheat from the chaff. These cartridges will all have good frequency response (bandwidth), and low distortion of all types. None will destroy a record rapidly, and all can be wired up to produce little or no discernible hum. One parameter which remains, as argued previously, is dynamic range. If we are searching for perfection regarding this characteristic, the chaff becomes quite evident, since all generators, or magnetic cartridges are apparently eliminated from contention. This is due to two factors; mass and hysteresis effect. In any system involving a magnet, shunt, and coil, which move

relative to one another, there must be movement before energy is generated. Further, once the movement beings there is a restriction to the rate of change of energy output, a characteristic of any inductance (coil) in the circuit. Once relative movement ceases, the energy remaining in the coil-magnet system will dissipate through the circuit, thus preventing perfect decay time. These generators sense velocity, and below a measurable rate (frequency) will not produce significant output. The result is the development of the various equalization curves (now standardized: RIAA) that compensate for the difference in output at low frequencies (low rate of relative movement) and high frequencies.

From a philosophical viewpoint, one might say that the requirement for equalization (of the signal from the cartridge) utterly eliminates any magnetic cartridge from contention. Practically, though, if a "perfect" preamplifier were available, this would be a minor issue.

If the transduction options were explained to a competent physicist, he would be quick to identify the strain gauge concept as the most likely to approach perfection. The old Euphonics, the Panasonic, and the potentially spectacular Win Labs cartridge all operate on the principle of a resistance which varies with strain produced by a moving stylus. Since the system senses amplitude rather than velocity, it is capable of response down to DC, or a permanent deflection of the stylus. In sophisticated electronic circles, a bandpass of the mere audio range (20-20kHz or so) is no challenge at all, due to our gigahertz technology. The limitations of the strain gauge system should not be the electronics involved; in fact, solution of the electronics problem is a simple affair, as will be described later in this text. The real limiting factor in a strain gauge cartridge appears to be the stylus assembly and the coupling method. The most successful techniques in these areas appear to be applied to the Win Labs product, which, in its early stages, was plagued with electronic (solid state) problems. Though most experienced audiophiles are accustomed to variation among apparently identical cartridges, it now appears that both the Panasonic and Win Labs are outstanding, with the latter product recently taking the edge in both performance and consistency. You may have noticed that the word "cartridge" was used, rather than "system"; the solid state electronics associated with these two products still leave a lot to be desired. The author contends, then, that the power supply and preamplification problems posed by the Win Labs and Panasonic cartridges are best solved with vacuum tubes. As will be shown, it is a relatively simple affair to convert almost any tube preamplifier to meet the requirements of any of the strain gauge cartridges, even the Euphonics.

For those committed to the more conventional magnetic cartridge, it is necessary to consider the selected unit along with the associated preamplifier. The perfect magnetic cartridge must generate an electric analog of the groove modulations, but in accordance with the (highly artificial) RIAA curve. The associated preamplifier begins its work with a signal which must be changed in order to be of value! The development of competitive moving coil cartridges poses an additional problem; that of the sensitivity of the preamplifier. The vast majority of preamplifiers require between 3.5 and 20 millivolts in order to produce adequate output, while moving coil cartridges produce about one-tenth of those figures; from 0.35 to 2.0 millivolts. There is a necessity for more stages, therefore, which compounds the problem. Whether one uses a transformer, a circuit added to the basic preamplifier, or an additional (external) device, the so-called "head amp" or pre-preamplifier is subject to noise, distortion, and other aberrations which are then amplified throughout the audio chain. Since tubes are inherently more noisy than transistors, the most successful among these devices have been solid state. Though transformers are quiet, except for a decided potentiality for induced hum, they typically lack a bit of dynamic range. One vacuum tube device, adapted from the old series DC voltage amplifier (pseudo-cascode) by Mr. Trevor Lees of Australia, is almost as quiet as its solid state competition, has excellent dynamic range, and provides enough gain to drive any preamplifier. Above all, it is musical!

The perfect preamplifier, then, cannot be properly described except in context; it is necessary to first state the cartridge type and output. The cartridge-preamplifier system, however, is electronically perfect if the output is an exact electrical analog of the groove modulations. Record wear and other practical considerations are important factors, of course, but at this writing it appears that the combination of Win Labs with a home-built tube power supply/preamplifier is potentially the most accurate, closest to theoretically perfect, transducer system available to date.

Once the signal leaves the preamplifier, however, a new set of problems arises. Power amplifiers favored by today's audiophiles range from a $25 used Eico to a 3200-watt per channel solid state behemoth. With a pair of relatively efficient loudspeakers, the two units (as manufactured) are virtually indistinguishable at low listening levels. If the Eico has been properly modified, many will prefer it to the giant solid state unit for all but the most demanding tasks. How could this David successfully fling stones at its gargantuan competition?

The answer lies in the description of the "perfect" amplifier. The term "straight wire with gain" provides the most easily understood explanation of the perfect power amplifier. It

takes the signal from the preamplifier (or electronic crossover) and produces an exact copy at much higher voltages, with an internal impedance such as to permit application of this signal to loudspeakers. A number of reviewers, published in various audiophile magazines, have tried to create simulations of the straight-wire-with-gain situation in comparing the performance of amplifiers. The term "straight wire bypass" has recently received undeserved acclaim, undeserved because the author has learned that these models contain, of all things, potentiometers. One of the potentiometers actually used by a major publication was tested by the author and found to significantly modify the signal. During that test, the potentiometer was inserted in a circuit parallel with (literally) a straight wire. A common signal was passed through both legs of the circuit, and fed to a first-rate oscilloscope. Only the electronic difference was displayed; it should have been a straight line, of course. The wiggles and obvious abberations made it clear that any "straight wire bypass" cannot use that type of potentiometer, and makes use of <u>any</u> potentiometer questionable.

Even the most optimistic amplifier manufacturer must admit that his product does <u>something</u> to the signal besides amplify it. Whatever else happens can fall into several categories. The signal might not be amplified uniformly, which produces amplitude distortion. Sum and difference signals might be generated, and added to the original waveform; this is one cause of intermodulation distortion. Harmonic distortion, crossover distortion, transient intermodulation distortion (the newly infamous TIM), hum and noise will all be present to some degree or another. Each of these factors have an effect on the signal processed by the amplifier; each has a different effect upon the listener. Some are tolerable, even unnoticeable, at quite high levels; others produce a significant irritation in miniscule doses. The audible difference betwen the deluxe solid state amplifier and the old Eico may be attributed to the <u>combination</u> of detectable aberrations created by each; the net result from the Eico was simply less objectionable. This is usually attributable to the presence of second harmonics, rather than high-order harmonics, in the Eico's output.

In defining the "perfect" amplifier, then, we will not attempt to relate it to the perceived sound, but will refer to that "straight wire with gain" concept which has sold so many amplifiers that do not even come close! In determining the relative merits and demerits of a specific product, it is worth the effort to apply the "straight wire with gain" model to <u>each</u> of the performance parameters. This will permit an accurate prediction of (or explanation for) perceived sonic performance. Were one to participate in such a complex analysis, it would become immediately apparent that the ear-brain perception system can tolerate some types of distortion without discomfort. Low-order harmonic and intermodulation distortion between one and five percent will probably be less unpleasant than TIM, or

crossover ("notch") distortion at one-tenth the level. Hum and noise are a factor of limited importance; in any reasonably well designed amplifier (tube or solid state) extraneous noise should be well below the troublesome level. The difference in perceived noise is insignificant as the S/N ratio goes from 100 dB to 70 dB. Dynamic range of an amplifier appears to be a major problem; a rough correlation can be made between that factor and rise time of the electronic chain. Further, it appears that the feedback circuit can (in any type of amplifier) improve "gross" performance and test data while eliminating some of the fleeting transients we depend upon in identifying music as "live." Amplitude distortion measuring techniques are not suited to detection of the equipment's capability to pass these transients; if they are present in the signal passed by the loudspeaker, though, your sensory system will know it!

Any reasonable modification program must optimize those technical performance parameters which contribute significantly to fooling the ear. This should be the case even if the resulting change in, say, transient response or harmonic distortion is at the expense of intermodulation distortion. If we begin the program agreeing that it is literally impossible to build a perfect amplifier, then it is obvious that we must do the best we can, accepting trade-offs and compromises when necessary, but putting the emphasis upon those points which contribute most to "fooling" the sensory system.

The perfect speaker works like the perfect cartridge in reverse. It converts an electrical signal to its mechanical analog, but then is faced with one additional task; it must couple that mechanical energy to the ambient air of the listening room. The transduction problem is difficult, but nearly perfect units have been built on a small scale; some of the headphones manufactured today are incredibly accurate. The coupling problem, on the other hand, has a profound effect on the end product (perception), somewhat independent of the effectiveness of transduction.

The perfect turntable is easy to define. It must rotate the record under the cartridge at a consistent and accurate speed, contributing nothing (in vibration, vertical, or horizontal deflections) to the signal derived by the cartridge from the record.

Since no turntable is capable of absolute consistency and accuracy, and every turntable has "rumble" at some level, it is important to determine acceptable levels of performance. Because of potential compatibility problems, one must understand the relationship between specific faults or capabilities in one component with those in another. If the amplifier and preamplifier are solid state or are capable of unattenuated response at very low frequencies, any subsonic signal generated

by the turntable/arm/cartridge assembly may find its way to the loudspeaker. This may cause near saturation of the amplifier, leaving little margin for the audible portion of the signal. The sonic result can be a lack of clarity of the average signal, and premature clipping on transients. Most modern turntables generate little spurious noise, as evidenced by the rumble statistics furnished by the manufacturers. Unfortunately, the most modern of all can cause a severe problem. The rumble statistics are weighted; that is, a curve is imposed on the rumble figures which lessens the significance of subsonic signals. While the direct drive turntable may have very low published rumble figures, a significant percentage of the rumble is "weighted out" because it lies in the subsonic region. If the cartridge (such as the Win, Panasonic, or Stax) is capable of transduction at such frequencies, and the associated electronics will pass such subsonics, overall reproduction can suffer. Use of a rumble filter will help, but a simpler solution--which will have less effect on the resulting sound--is to use capacitively coupled vacuum tube electronics. Though some such devices will certainly pass subsonics with little attenuation, selection of the capacitor values will reduce the effect markedly.

Though we have not discussed the perfect tape recorder, the perfect tuner, the perfect crossover (electronic or passive), or other ancillary components, it is now relatively easy to define the optimum audio system.

Such a system will detect, pass, amplify and transduce a signal with virtually no change, whether the signal originates at a microphone, on a disc, on tape, or from a tuner. The system will neither add nor detract from the original signal, and residual noise levels will be at a point where they do not interfere with perception of the program material. With a "perfect" audio system, the perceived sound will depend utterly upon the "software," or program material constituting the input. With "perfect" software, in disc or tape form, the net result will be a duplication of the original performance.

Since no perfect component is available, at some point the audiophile must determine just what constitutes an acceptable level of performance, and where compromises may be made. It is also necessary to decide which performance parameters are most important. The easiest way of doing this is to listen closely to a number of truly fine audio systems, all playing the same program source, and decide which seems closest to a "live" performance. The very best of these systems will likely consist of vacuum tube components, which is unfortunate for several reasons. First, the nature of such devices demands an extremely high price. Second, it is virtually impossible to correlate commonly published distortion and power figures with the subjective impression of "live." Third, when listening to any two really high quality pieces of audio equipment, the differences are extremely small and can be detected by only two

processes: the A-B comparison is one; lengthy listening periods is the other. If a serious listener concludes that the most realistic (to him) sound available is coming through vacuum tube components, but simply cannot afford today's prices on such devices, this book is for him.

chapter two

the software: discs, tapes, and tuners

The previous chapter argued that even the perfect system is only as good as the software it is fed. A detailed discussion of the records and tapes of today is a depressing procedure, as that aspect of the entertainment industry is producing a sorry output which has, in fact, deteriorated at almost the same rate at which the equipment has been improved.

The records of today are, for the most part, the weakest link in the audio chain. Not only are they overprocessed, compressed, and subject to serious quality control errors, but an overdependence upon the new technology of noise reduction has permitted laxity in areas once "under control." The program material, or performance, is suffering also. Budget considerations have afflicted nearly every symphony orchestra in the world, and the cost of an hour's rehearsal of even a small group is exorbitant.

The recent world energy crisis has dramatically reduced the quantity and quality of vinyl used in disc pressings, and lower quality control standards have permitted a great deal of junk to reach the market. The term "junk" is used advisedly, as it refers to those records which cannot be played on a good system, due to surface imperfections, warpage, or nonconcentricity (off-center hole). The thinner discs are far more subject to warpage, even after only a few minutes exposure to mild heat.

Attempts to flatten a warped record, using the customary technique of plate glass and warm oven, often totally destroy the disc.

Once the audiophile acquires a (perhaps coincidental) combination of good performance, engineering, and pressing, the record simply won't last long without special precautions. New products have been devised to protect or clean the discs, with varying results. A simple means of testing these products indicates that few really do any measurable good. That test technique can be applied to any junk record in new condition, even a 65¢ special. It should be played at the highest speed of which the turntable is capable, at the maximum stylus pressure recommended by the cartridge manufacturer; fortunately the preamplifer need not be turned on! If a white cotton pad is applied to the record, it will soon show the results of such maltreatment and will become first gray, then black, as vinyl is picked up by the cotton. If the pad is held stationary as the record passes beneath it, any "treated" portion of the disc will (if the treatment works) put less vinyl on the pad than the untreated portions.

This test shows that technology has provided us with a product which <u>will</u> prolong the life of our best records; it is expensive, but it works even better than the author's solution, which is a form of molybdenum disulfide dissolved in a highly volatile liquid. The commercial product is called "Sound Guard," and may be a more sophisticated solution of moly compound. Most of the other products are intended to clean rather than protect the disc; few claims are made regarding a reduction in record wear. One of the least expensive and most effective methods of preserving records is to play them wet! For many years a large number of British audiophiles have used water plus a wetting agent to lubricate and cool the vinyl. This technique can be more of a mess than the average person is willing to contend with, but it certainly keeps the records clean and preserves the music. Apparently, no damage is inflicted upon the cartridge, though the Decca (with the thread running from the stylus assembly to the body) seems quite vulnerable to moisture. In fact, some Decca users report a difference in sound as the humidity changes!

Many discs have been marketed which profess to be "state of the art." The most often encountered are "direct to disc" recordings, which are made without the normal taping, dubbing, overdubbing, etc. Instead, the information from the microphones is passed through a mixer directly to the amplifier and then the recording head. This process creates two great challenges; the entire side must be cut without rest for the musicians, and the engineer must know the program material perfectly in order to permit him to monitor and adjust intergroove spacing. The results can be superb; the first of these efforts was made in the mid-60s and released on the obverse side of a "stereo test record" marketed by Radio Shack. The most recent, and popular,

have been marketed by Sheffield Records in Santa Barbara, California. No disc manufacturer has had so profound an effect on equipment sales than Sheffield, whose products are used in virtually every audio showroom. Among serious audiophiles, no records are so frequently used to demonstrate a new acquisition. Other carefully produced discs are on the market, ranging from a white vinyl novelty marketed by Sound Advice magazine to several 45 rpm discs sold by Jonas Miller, in California. The remarkable Mark Levinson reference series represents one of the few combinations of fine performances with meticulous engineering and pressing. For those who enjoy collegiate (and high school) band, chorus and orchestra performances, there is no better series than the records produced by Fulton (FMI) and marketed by Ark. Another entry into the field of audiophile recordings is called "An Unrehearsed Experiment," which is very appropriately titled. One of the very best discs available today is sold by Burwen and entitled "Perfectly Clear"; it is quite demanding of one's system, as it is recorded at a very low level. Desite that fact, which certainly points out any residual noise in the system, the record is outstanding. These products, and others of similar quality, prove that it is possible to issue a record which is superior to commercially duplicated tape recordings. In fact, these products constitute an indictment of the record industry.

Prerecorded tapes are generally poor, though exceptions exist. Reel-to-reel production is at its lowest level in many years, and cassettes have taken over the consumer market. Eight-track catridges are not serious contenders, as the problems associated with a mechanically moving playback head seem to be economically insurmountable. Theoretically, this should not be the case; the technology exists to produce eight-track cartridges which are superior to cassettes. Because there are no commercially available eight-track or cassette units equipped with vacuum tube electronics, this text will be limited to a discussion of power supplies supporting tube electronics of older reel-to-reel machines; that information appears in a later chapter.

The advent of digital audio processing, in Great Britain and the United States, promises to change our methods of audio data storage and presentation. Several products are now available; the pace is expected to accelerate. In fact, digital audio processing may well be the wave of the future, as--in theory--it approaches perfection.

The tuners of today are uniformly impressive; the performance parameters of the average tuner would stun any engineer of ten years ago. Whether equipped with phase-locked loop and CRT multipath indication, or a simple ratio detector and only three knobs, a tuner can be no better than the signal it detects and processes. Despite a marvelous AM tuner by Dymek, that transmssion media is not considered high fidelity. FM performance, however, can be very accurate, though the best quality is

possible only when the transmission originates at a live presentation. The pre-recorded material transmitted by most of today's FM stations is purchased in bulk on ten-inch reels of tape. After processing, compression, dubbing and redubbing, the resulting signal is pure Muzak. The very few stations which are still playing records generally use poor equipment. A recent examination of one San Diego station discovered a General Electric variable reluctance cartridge in constant use! The low frequency limit of FM broadcasts is dictated not by bandwidth, but by rumble produced by the antiquated Rek-O-Kut, Gray, and ORK turntables which last forever and sound precisely as bad after 15 years of use as they did when new.

Those fortunate audiophiles still using a REL Precedent, H. H. Scott, Marantz, Karg, or other truly fine tubed tuner will find only limited assistance in this text. Improvement of the power supply will nearly always help, as will substitution of metal film resistors for the cheaper carbon composition components. A proper alignment job will do wonders, of course. With tuners, unfortunately, it is unlikely that one will be able to modify a vacuum tube unit to outperform a good solid state tuner, despite mystique. The advent of large-scale integrated (LSI) circuits permits tremendous performance in compact packages. With a strong signal, the tubed unit might sound better than its transistor competition, but it cannot sound better than the signal being transmitted!

chapter three

tubes vs transistors

A vacuum tube and a transistor do essentially the same thing in essentially the same way; the differences are sufficiently small as to permit nearly any electronic device to be built using either. Both tubes and transistors have advantages and disadvantages, of course, and (at first) the transistor seems to be the answer to the consumer's prayers. Indeed, it is, until the finer points of audio reproduction are the deciding factors in selecting the optimum device for a specific function. It is reasonable to conclude that tubes are obsolete in virtually every area of electronics except sound reproduction. There are literally no other advantages to tubes; they get hot, have a relatively short life, occupy a lot of space, require a massive power supply, vary in performance during their lifetime, are extremely expensive compared to transistor counterparts, have a higher premature failure rate, are inconsistent in quality, suffer from a relatively high internal capacitance and inductance, are high impedance devices usually requiring transformers or cathode followers for impedance matching, and suffer from a number of other seemingly disqualifying ills. Transistors have only two significant disadvantages. Almost any circuit or component failure can sometimes instantly destroy nearly all related solid state devices in a "chain reaction." The other sad fact about transistors is that they just do not sound as good as tubes, when used with associated components of sufficient quality to permit the difference to be distinguished.

Not even a detailed, lengthy, formal dissertation regarding the technical differences between these two classes of devices would explain, entirely, the sonic differences so sought after, but unattainable, by manufacturers of solid state equipment. It is quite an audio mystery, which has been compounded by recent innovations in vacuum tube technology and applications which have increased the tube "lead" by a whole order of magnitude. Several new preamplifiers and amplifiers, tubed or hybrid, have entered the market; many are acclaimed--by the audiophile community--as far superior to anything (tube or transistor) previously available.

Before it is practical to begin laying out circuits and modification options, it is a good idea to establish a common point of departure. The next few paragraphs deal with the basic principles of operation of tubes and transistors; the information is presented on an elementary level, and can be bypassed by those who are already familiar with the subject. It will probably be necessary for the novice to acquire additional material in order to clearly understand some of the principles involved, though to do many of the modifications in this manual one need only be an experienced kitbuilder. Some of the more technical issues, however, require use of test equipment beyond a simple voltmeter. In virtually every case, at least an elementary understanding of vacuum tube operation will help enormously.

Vacuum tubes and transistors both operate as valves, the "handles" of which are "connected" to the input signal. An electrical potential (potential for movement of electric energy) is created between two points, and the valve simply permits that movement in a manner which is an exact duplicate of the input signal in every way, except for the amplitude. This capability for amplification is similar in both tubes and transistors, however tubes generally operate as voltage amplifiers (high impedance devices) and transistors are normally thought of as current amplifiers (low impedance devices). This fundamental difference explains the manner in which amplifiers are connected to loudspeakers. A solid state amp is usually wired <u>directly</u> to the loudspaker, which may range in impedance from less than 4 to about 16 ohms. The tube, on the other hand, is usually wired to a transformer; such transformers are impedance matching components which convert the high voltage, low current, signal of the tube circuit to the low voltage, high current requirements of the loudspeaker. Impedance matching in any circuit can be critical, as the degree of mismatch affects linearity, noise, efficiency and other factors. Tube circuits are more critical than transistor circuits, in this respect. They also require care in selection of associated components, such as resistors and capacitors. The much higher voltages used in tube circuits require more expensive components capable of operating safely in that sort of environment. In many

The plate of the tube attracts the electrons boiled from the cathode. The attraction is due to the very high positive voltage provided by the power supply (B+). Since electrons possess a negative charge, they are attracted to any positive (or less negative) point. If no obstacle were placed between the cathode and plate, all the electrons released by the cathode would appear here, producing a constant current limited only by the power supply capacity and tube characteristics.

The grid of the tube is the 'obstacle'. With no signal present, it still is kept at a slight negative charge, which prevents uncontrolled flow of electrons from cathode to plate. The signal is superimposed over that negative 'bias', which varies the amount of negative charge on the grid at any given instant, thus varying the flow of current from cathode to plate. The fluctuation in negativity caused by the signal can be very small, yet the effect on current flow will be great. The result is amplification. The grid is seldom kept so negative that no current flows with no signal present; in fact, there is a constant flow of current which is modulated, or varied, in accordance with the input signal.

The cathode is the source of the electrons attracted to the plate and controlled by the grid. The cathode is coated with a substance which assists in the emission of electrons, when heated. Electrons boiled from the cathode are constantly replenished by a connection to 'ground'.

The filament, or heater, is connected to a power supply of its own which provides sufficient energy to heat the filament to incandescence. That heat is transferred to the cathode by conduction and/or radiation.

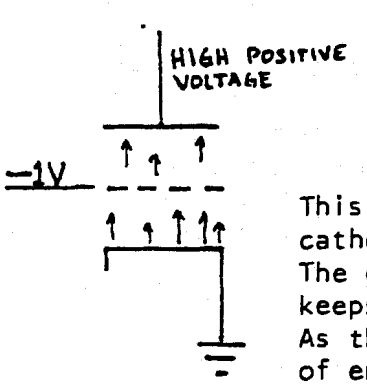

This simplified tube circuit shows the source of electrons, the cathode, constantly replenished by its connection to ground. The grid is kept charged to a slight negative potential, which keeps the current flow through the tube at the proper idle level. As the grid voltage varies, due to the input signal, the flow of energy from cathode to plate shows a greatly increased but otherwise identical variation.

Figure 1

cases, appropriate components are available only through special order (in quantity from the manufacturer) or on the surplus market. If one were to design two nearly identical circuits, the only major difference being the use of tubes in one and transistors in the other, the tube circuit would cost much more to build simply because a 50 microfarad capacitor rated at 450 volts is much larger and more costly than a similar capacitor rated at 50 volts. The former capacitor would be appropriate in a tube circuit and the latter in a transistor circuit. Power supply requirements are also quite different. As Figure 1 shows, the source of electrons in a vacuum tube is the cathode, which is excited, or heated, by a filament. That excitation boils off electrons in a manner not unlike steam rising from heated water. That constantly replenished cloud of electrons is attracted to the plate, at the "other end" of the tube, which is charged with a high positive voltage. The electrons would move freely across the intervening space were it not for the grid, which lies between the cathode and plate. The grid is supplied with a small negative electric charge, or "bias," which tends to inhibit flow of electrons from cathode to plate, or maintain it at a desired level (idle current). As the electrical input signal appears on the grid, the grid's relative negative voltage varies.

The variation of grid voltage with signal controls the flow of electrons from cathode to plate. As the grid becomes slightly <u>less</u> negative, more current flows, and vice versa. The resulting fluctuation of electron flow is superimposed on the idle current (DC) to produce a composite of DC and AC. In an amplifier consisting of more than one stage, that alternating signal--an amplified version of the original input signal--is passed onto the grid of the next tube for further amplification. In a power amplifier, the large voltage fluctuations must be converted to the low impedance requirements of the speaker system, so the final output tubes are connected to the secondary of that transformer.

In order to provide the plate of each tube with the quite high voltage required for efficient operation, the power supply must be massive (by solid state standards). The idle current always flows, to permit proper operation of the tube, as does the filament, or "heater" current. This results in a relatively inefficient circuit, as the sum of heater energy and idle plate current energy is literally the majority of the total power consumed by the unit, even when it is working hard. Despite this disadvantage of power consumption compared to power delivered (efficiency), the tube has definite advantages.

If we agree that neither tubes nor transistors are perfect, and that tubes sound better, then it is evident that the faults of tubes are more easily tolerated (or are less perceptible) than faults of transisors. The "state of the art"

tube modification should attempt to improve those qualities which make listening to a tube system more pleasant than the alternative. For instance, why is it that a tube amplifier, driven into clipping, is more easily tolerated than a similar solid state unit under the same conditions? Take a look at the difference in the clipping characteristics of the two units, as shown below.

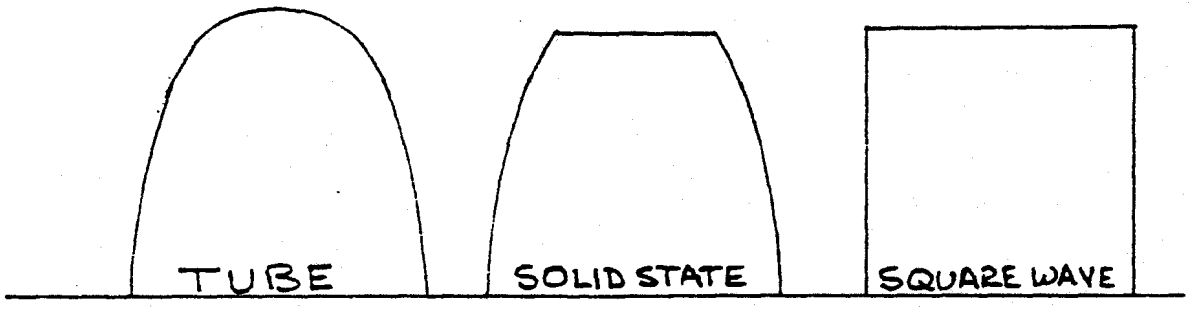

The waveform produced by the solid state amplifier has relatively "square" corners. In order to deliberately create a square wave, one generates a fundamental frequency and then superimposes over it one harmonic after another. As the higher order harmonics are added, the corners of the waveform become sharper and sharper, until they become indistinguishable (visually) from the square shape sought. The waveform of the solid state unit obviously contains more of these higher order harmonics than are produced by the tube amplifier under the same conditions. It is the presence of these high order harmonics which give the solid state amplifier an unpleasant clipping characteristic. There is a basis for argument, of course. If $1000 buys 75 watts of tube power per channel and five times as much power in a solid state unit, obviously the latter unit will be drive into clipping far less frequently than the former, right?

Wrong! The Audio Amateur, published by Ed Dell in Peterborough, New Hampshire, is the most highly respected magazine of its type in the world. Though it is aimed primarily at technically inclined audiophiles, it often presents projects within the reach of any kit builder and, in fact, an allied firm (Old Colony Sound) markets kits of the more popular projects published in the magazine. A recent issue described a bilateral clipping indicator useful with solid state amplifiers. That clever device flashes a light (LED) whenever the amplifier clips on either a negative or positive peak. Experimentation with the clipping indicator has produced some embarassing data. A popular 350 watt solid state amplifier

was seen to clip regularly (though the meters did not show it) when used in a sound reinforcement system, despite a fairly low volume level and very efficient speakers. Since the signal source was an array of fine microphones feeding an excellent mixer, the signal itself had outstanding dynamic range. The tiny percussive transients of piano music caused almost constant flickering of the indicator. Even Howard Tremaine, author of Audio Cyclopedia, agrees that a live concert may have dynamic peaks of about 130 dB! Well recorded music often retains a significant percentage of the original dynamic range which, it has been argued, is an important factor in fooling the sensory system.

When that sort of information is on a disc, by whatever fortuitous set of circumstances, it can be extracted only by a cartridge which operates in a manner which does not inhabit such transients. That limits the field to the Win Labs, Panasonic, MicroAcoustics, and a very few magnetic (generator) units. The preamplifier, also, must be capable of operating under such conditions without overleading. Assuming that the signal reaches the amplifier without being clipped along the way, accurate power amplification can require as much as a thousand watts per channel peak, though average power ouput is only five watts. These facts lead to the conclusion that (from a clipping characteristic standpoint) one must own either a behemoth transistor amplifier which almost never clips (like the marvelous Dayton Wright, with 3200 watts per channel!) or a good tube unit, the clipping of which can be tolerated. Therefore, in modifying a tube amplifier one should attempt to produce a unit which has the most agreeable clipping characteristics possible. This can be done, most simply, by accepting a power reduction (in most units) and converting to triode operation. The process is simple, as discussed in a subsequent chapter, and the results are gratifying. Though the (lower powered) amplifier will clip more often at a given listening level, the clipping waveform will show a prominent second harmonic (rather than higher order harmonics) and will sound richer and less harsh. A worthwhile goal....

Another factor concerns feedback. Solid state amplifiers are usually designed with larger amounts of negative feedback than their tubed counterparts. Distortion statistics are determined under steady state conditions, in which the feedback loop has had time to do its job (get back to the input signal and neutralize most of the distortion). The more feedback the more necessary it must be, to achieve the published distortion figures. Unfortunately, music acts like a "steady state" signal only when the instrument is a synthesizer, and then only under certain conditions.

Typically, music goes by electronic fits and starts, from quiescence to crescendo. A look at an oscilloscope presentation of a music signal will prove that the content is full of ups and downs. An electronic signal moves quite fast, of

course, but can be delayed a bit by capacitors and inductors, under the right conditions. If low distortion depends upon feedback, and feedback takes a finite amount of time to do its job, then some portion of the beginning of each peak must somehow do without feedback. In fact, there must be an important percentage of the overall musical signal which is never affected by feedback and, consequently, is distorted to a greater extent than the rest. Tube amplifiers are normally designed with relatively little feedback. That is, they are not nearly as dependent upon negative feedback as are transistorized amplifiers. A well designed amplifier, tube or solid state, should be capable of operating reasonably well even when the feedback loop is interrupted. Distortion will go up, of course, and bandwidth will go down, but the result will not be a sonic catastrophe. Such an amplifier will sound much better when the feedback loop is reconnected, but examination of its characteristics will help to point out yet another design goal for the builder. When negative feedback finally reaches the early stage at which it is reinjected, it works against the primary signal. To that stage of amplification, it appears that the level of the input signal has been reduced. As the input signal level increases, so does output of each stage (within its limits). More feedback finally appears, to keep the relationship of signal and feedback correct, reducing the magnitude of the signal "seen" by the stage. While feedback is absent for that instant (!), the signal rises to a very high level, perhaps beyond the overload point of the stage. For a moment the stage is overloaded; then feedback "catches up" and reduces the signal to a proper level, returning the system to normal operation till the next transient comes up, a few milliseconds later. This nonlinear condition is called Transient Intermodulation Distortion (TIM), for some reason, though it really consists of a multitude of small periods in which two unfortunate events occur. First, the distortion characteristics of the basic (non-feedback) amplifier are heard. Second, some (early) stages may be clipping.

This situation cannot be eliminated, but it can be made a less catastrophic event. First, design an amplifier which operates reasonably well with no feedback whatever. Sacrifice bandwidth (frequency response) for lower distortion, since attenuation at the frequency extremes is often more acceptable than distortion. Build the "front end" of the amplifier with the maximum "headroom" possible, to raise the point at which overload occurs. That is, raise the bias of the tubes. Then, experiment with negative feedback, beginning with a very little and increasing the feedback between listening tests until a sonically excellent point is achieved. It is also a good idea to eliminate capacitors and inductors from the feedback loop, as they can act to slow down the effect of feedback. Above all, start with a vacuum tube amplifier!

The same principles apply to preamplifiers. If the circuit is basically sound, feedback can be reduced. A magnetic cartridge, of course, demands feedback for RIAA equalization.... or does it? It is possible to build a preamplifier with RIAA equalization but without feedback! How about designing the unit with a lot of gain, and then forcing the signal through a simple resistor-capacitor network which will reduce the highs and reshape the audio curve in accordance with RIAA. There is a huge sacrifice in gain, of course, since the entire signal must be reduced to the "lowest common denominator," or the amplitude of the lower frequency to be reproduced. But it works, and works exceedingly well. It is not a project for the amateur solder-slinger, but the reasonably competent technician can handle it. Even with conventional feedback circuitry, the vacuum tube preamp has an immediate advantage over its transistor competition. Like power amplifiers, the solid state preamplifier is usually built with a great deal of feedback (how else can one advertise 0.001% distortion?). Any signal condition which produces the equivalent of TIM is more likely to affect the preamp with the most feedback.

Another point concerns overload; in properly designed preamplifier circuits, the vacuum tube is almost impossible to overload--it has a great deal more "headroom" than the bipelar transistor.

So there are valid reasons for preferring tubes, and some ways to improve the things you like about them.

Tubes sound better, and can be made to sound even better yet!

While solid state devices are still quite new, vacuum tube technology has virtually stopped moving. Emphasis is now placed on manufacturing techniques, durability, consistency, and (in a very few fields) applications. It has been a very long time indeed since the introduction of the last new multipurpose vacuum tube, though a few very sophisticated special function tubes have been built for use in microwave and communication devices. New technology has evolved in applications, however, as evidenced by the superlative performance of some of today's vacuum tube audio equipment. The perfect tube would amplify in a perfectly linear fashion. That is, any change in grid voltage would result in an exact, though amplified, change in plate current flow. Complex signals would come out exactly as they went in, but amplified, with nothing whatever added or taken away. The perfect tube would add no noise at all, of course, and would last forever or at least operate without change in performance during its lifetime.

It is unlikely that industry will spend the money to improve the degree to which present-day tubes approach these levels of perfection; the market just is not there. In fact, most United States manufacturers have stopped tube production, or are about to. Fortunately, this does not mean a great deal to the

consumer, since these manufacturers are now buying tubes made in Holland, West Germany, Britain and other East Atlantic countries, and marketing them under their own names. This may well be a blessing in disguise, for more than one reason. Many owners of tube equipment "viewed with alarm" the impending cessation of U.S. tube production and promptly dumped their equipment on the market, lowering prices of used tube components dramatically. Also, West German, Dutch, and British tubes have always been far superior, in audio applications, to U.S. made tubes. Many audiophiles feel that such brands as Siemens, Telefunken, Amperex, Genelux, and Mullard represent today's state of the art in vacuum tubes; the retail prices of these products reflect that attitude--they are expensive! The price is actually dropping since they have picked up a U.S. label. It takes sharp eyes to determine the original manufacturer by examining the configuration of the interior elements, but with a Telefunken 12AX7 in one hand the new "G.E. made in W. Germany" in the other, one should be able to make a valid decision without difficulty.

Another aspect of vacuum tubes is the difference in perceived sound from one brand to another; a difference which increases as the associated circuitry is improved. It is sometimes necessary to accept an increase in residual noise levels in order to optimize other aspects of sound reproduction. The best example of this is the 7025, which is a 12AX7 with a controlled noise characteristic. The sonic difference between this tube and, say, a Telefunken 12AX7 is significant and it is difficult to find a "good sounding" 7025 by any manufacturer.

Because circuit differences have more of an effect on one tube than another, a nearly infinite number of combinations (and an equal number of variations in sound) can be be built up; far too many to permit individual comparative evaluation.

An examination of several 12AX7s will explain the differences. Some use a large electrode area, such as the Telefunken, and others use smaller areas. In one West German instrumentation tube the elements are less than half the size of those in the Mullard; despite these differences, the specifications and parameters are nearly identical.

In the audio chain, the power tube least susceptible to sonic differences from brand to brand is the power output tube. GE is presently marketing an outstanding 6550, while Radio Shack sells an EL-34 marked "Realistic Lifetime," "Japan," and "GT BRITAIN"; all on the same tube! In any case, a well matched pair of output tubes in a properly designed circuit will sound excellent, regardless of source. Some extremely fine differences do exist, but they are not as significant as the differences in the 12AX7 field.

Most of the European manufacturers have been offering matched pairs of output tubes for many years. The U.S. firms marketing those tube types will probably offer matched pairs only if there appears to be sufficient demand. At least one firm, Temtron, is marketing matched pairs of Amperex EL-34s at about $7.50 (June 1976), but the supply is limited. KT-88s are quite a bit more expensive, however, and even harder to locate. There is a solution, fortunately, which permits the use of non-matched pairs of tubes with excellent results; individual bias for each output tube. That technique will be discussed in the chapter dealing with power amplifiers. For the audiophile without access to matched pairs of output tubes, another solution presents itself.

It is possible to match tubes with any high quality dynamic conductance tube tester, though the match will be at one frequency only, and must be assumed for the remainder of the audio spectrum. Simply insert the tube, let it warm up thoroughly, and put the appropriate switch in the "merit," or "test" position; then note the point to which the meter travels. Tube testers in drug stores and supermarkets are usually marked only with red, yellow and green zones on the meter scale. This imposes a bit of a job, since grease pencil must be used to number each tube and mark the point to which the needle was driven. If the scale is marked with numbers, simply write the appropriate number on each tube, and match them as closely as possible. In most cases, the scale is marked arbitrarily; the numbers are meaningless except for a relative comparison. It is essential, therefore, that one use the same tester for all tests on all tubes. Assuming a scale of one hundred, it is preferable to use two "weak" tubes marked "60" and "62" than two strong tubes marked "99" and "85," unless the amplifier is capable of biasing the tubes separately. This is because the weaker tubes will provide less distortion, up to their limit, than the unmatched pair of stronger tubes at the same operating point.

In preamplifiers, it is unnecessary to match any of the tubes in one channel. A few perfectionists will, however, try to perfectly match equivalent tubes in the two channels, ensuring the same gain from stage to stage. The variance in perceived volume level from a "weak" tube to a "strong" tube will be barely apparent, and then only if the tubes appear in one of the first stages of amplification. Testing preamplifier tubes for noise is simple, though time consuming.

The tube must be placed in the first stage of amplification and the input selector moved to "phono" or "tape head." The latter position is preferred, as differences in tube noise will become more apparent. It is difficult to perceive small differences individually, though the collective difference may be quite significant once all the tubes in a circuit are selected for minimum noise. In order to ensure accuracy, use a wide-range AC voltmeter or an oscilloscope at the output terminals

If one wishes to reduce potential wear and tear on the circuitry, and the heat generated by the component itself, this technique will meet these limited objectives.

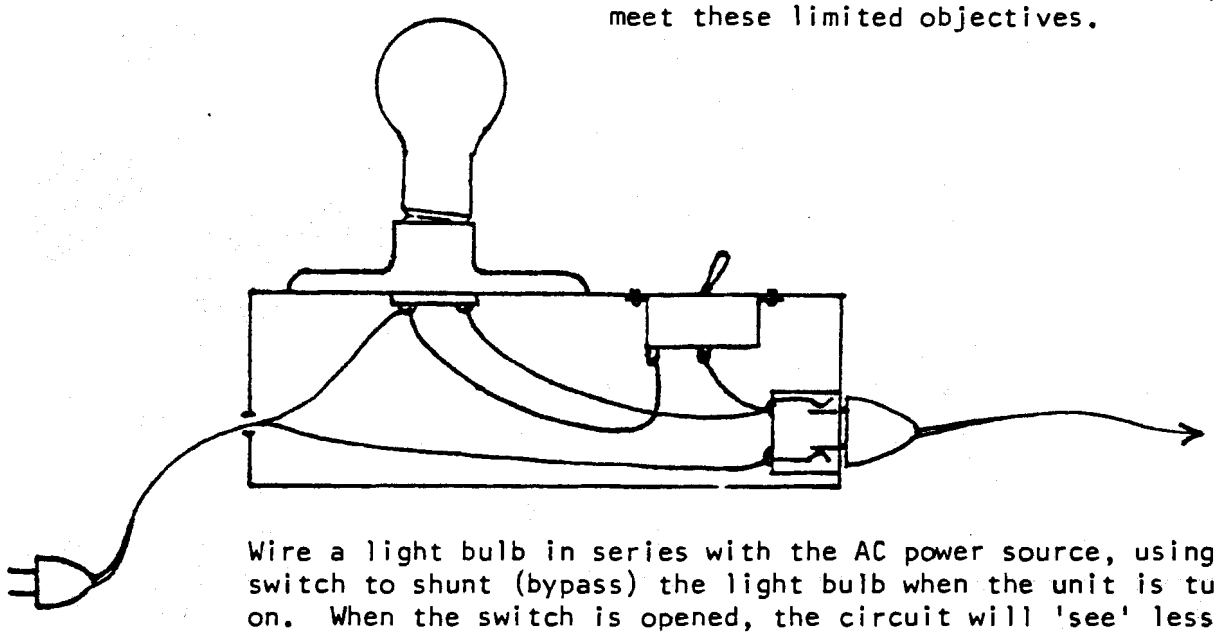

Wire a light bulb in series with the AC power source, using a switch to shunt (bypass) the light bulb when the unit is turned on. When the switch is opened, the circuit will 'see' less voltage, but enough to keep everything operating and the tubes heated. Select a light bulb with a wattage rating equal to one half the wattage rating of the component wired to it.

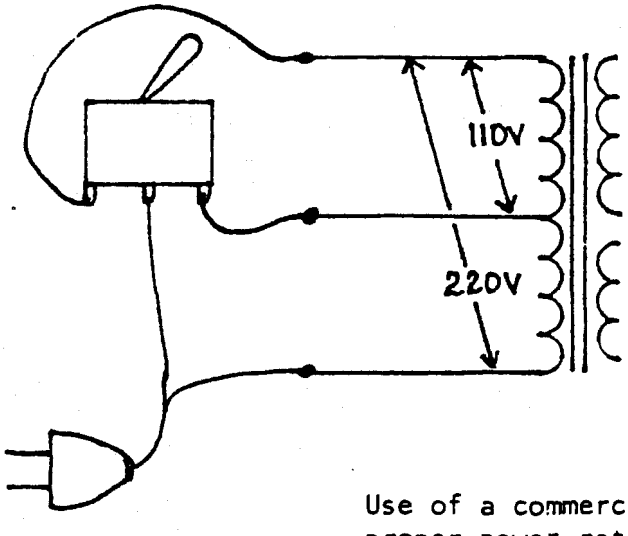

If the component in question is equipped with a 110/220 volt transformer, another technique will result in an actual reduction of total power consumed. Wire a switch to permit selection of the input voltage taps on the power transformer, as shown. When the 220V winding is connected to the conventional 110V power source, power consumption and heat will be reduced by one half.

Use of a commercial diac/triac motor speed control box, of the proper power rating, is also recommended.

Figure 2

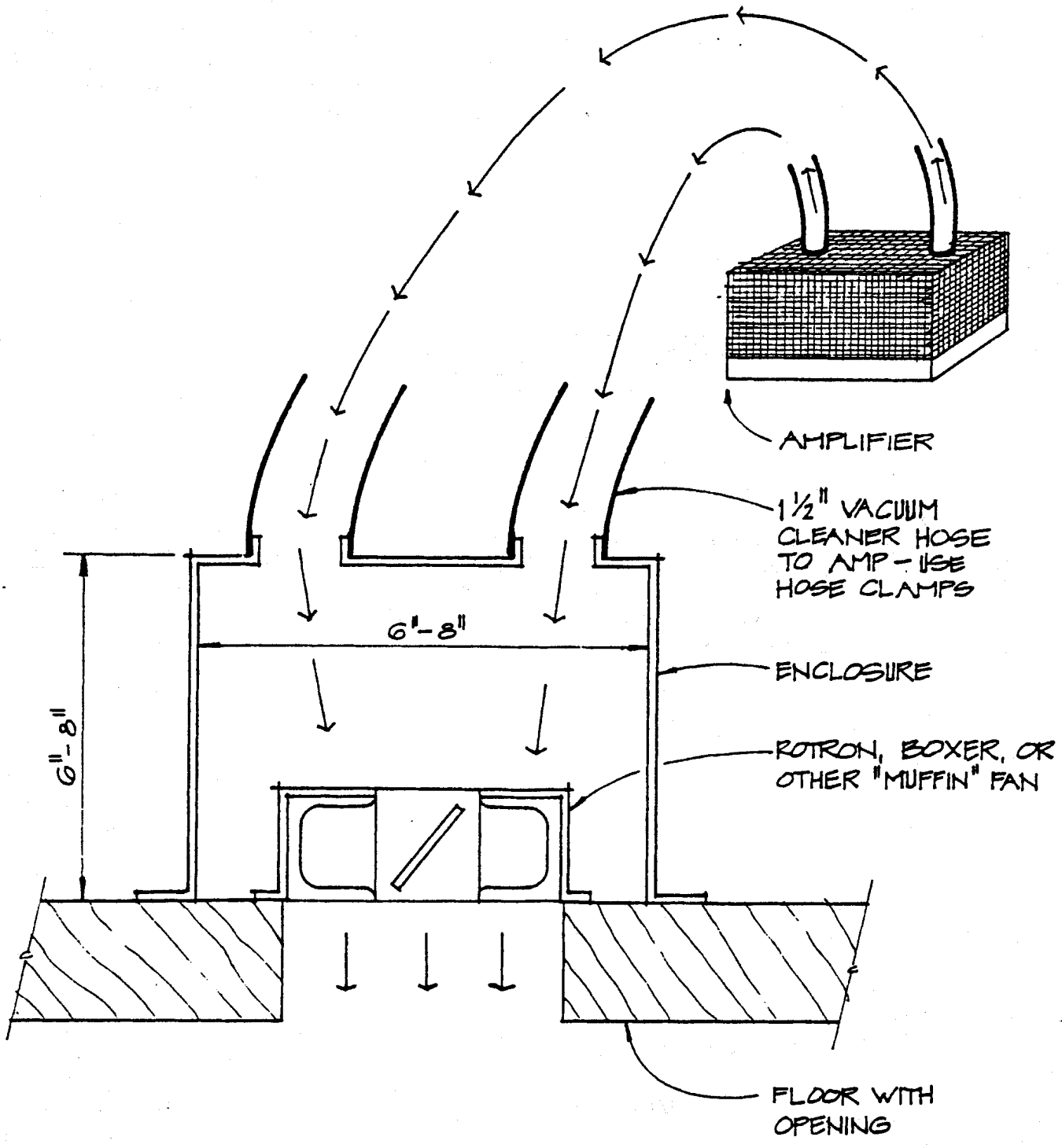

COOLING FAN ASSEMBLY FOR MULTI-POINT HEAT REMOVAL, USING A SINGLE APPLIANCE.

Figure 3

of the amplifier, and turn the gain to maximum. The differences between tubes should be obvious. In every case, ensure that the case is "zipped up" and the tube has plenty of time to warm up thoroughly--that is why the process is time consuming. Reduce the time to about half by using both channels.

Another point is asserted by a number of authorities on tube technology, including Howard M. Tremaine. These engineers claim that tube life will be increased and tube noise reduced, both substantially, if the tube is always left on! Figure 2 shows some techniques for doing this.

Another advantage to this procedure involves the electrolytic capacitors in the circuit. If they are kept charged, they will last longer. Some manufacturers claim that such capacitors, kept charged, have an "indefinite" lifetime. Since heat is the primary enemy of component life, it is essential that each unit left continuously on be properly ventilated. A simple preamplifier, for instance, probably would not get hot for hours; when it does, components deteriorate rapidly. The simplest of ventilation techniques will avert heat buildup.

Fan cooling is mandatory with most vacuum tube power amplifiers. One of the best techniques for cooling electronic equipment consists of the construction of a box, with an internal fan (mounted in the exhaust direction), and a number of holes equal to the number of items to be cooled. At each hole is attached an appropriate length of vacuum cleaner hose, which is then directed to a position atop the item to be cooled and held in place by the simplest of brackets or clips. If the box is then mounted at a hole (in the wall or floor), the heat is exhausted from the room and the noise of the fan is considerably reduced. See Figure 3.

notes

chapter four

preamplifiers: candidates for modification

In selecting a preamplifier for modification, only a few rules should be followed. The basic construction of the unit should permit the modification with a reasonable amount of work. Point-to-point and cordwood construction may increase the required hours; printed circuit board construction was fairly common beginning in the mid 1950s. There are several likely candidates among those using a "hard-wired" chassis, but the result should be worth the effort. It is a good idea to determine those control functions which are necessary to the intended use of the preamp, and seek a unit which provides these facilities. Further, it is necessary that the circuit be accessible; a few units are so constructed that one simply cannot reach some of the circuit elements without totally dismantling the unit. Another important point concerns the number and type of capacitor and tube sockets on the chassis; it is more work to cut new holes. The power supply should be capable of supporting the intended number of tubes, including any cathode followers to be added.

The more spacious the chassis, the less difficulty in finding locations for new chokes and capacitors. Appearance is not much of a factor, unless the object is the construction of a "killer" which will look factory fresh, though antiquated, and will "blow away" a friend's transistorized unit. That is a lot of fun, by the way. An old Eico, for instance, can be

a holy terror in a solid state showroom. One Californian crammed that tiny case with an utterly lovely modification, then approached a local audio store apparently seeking to "trade it in." He acted appalled at the $10 trade-in offered, and claimed that his unit might not look like much but worked beautifully. Accepting the challenge, the store manager wired the Eico to an exceptionally fine system and, in the A-B test which followed, was astonished. To the ears of a number of salesmen and customers, the little Eico clearly outperformed a supposed outstanding solid state preamplifier; The appearance of that unit was deliberately kept absolutely original, though a dent or two and a bit of rust detracted somewhat, as did the knobs, which kept falling off.

Once a candidate for modification has been identified, based on the factors already listed, appearance is no problem whatsoever. There are many electronics-oriented sheet metal specialists capable of solving any cosmetic problem at reasonable cost. It is helpful to have the original faceplate in order to permit proper location of the holes and slots. The shop will, for a reasonable price, cut and anodize a new aluminum plate. It can then be silk screened (expensive if only one is to be done) or rub on letters can be applied. One of the most attractive such projects was used to improve the Dynaco PAS; the result is on a 19-inch rack mount, with black anodized aluminum face and knobs, white rub-on lettering, and stainless handles. Assuming, then, that appearance will not be a major issue, other criteria should be used to select a candidate. Remember, the sonic result can be nearly the same regardless of the unit with which the project is begun.

The basic circuit recommended for the "ultimate" modification of the majority of preamplifiers is quite consistent; the differences are minor and in most cases simply create a standardized power supply.

The preamplifier modification shopping list does permit selection of less extensive modifications, however, and if it is the intention of the builder to "improve" the basic circuit rather than replace it entirely, it is important that the basic circuit be sound. As an example, the owner of a fine Marantz 7c might wish to upgrade his circuitry somewhat but would be reluctant to strip the chassis and begin anew. On the other hand, those using the Shure studio preamplifier or an older H. H. Scott would probably choose to replace the circuit entirely.

Most projects resulting from this manual will be applied to components already owned, though some audiophiles may evaluate their preamplifier and then elect to buy another, more suitable candidate on the used market.

Those preamplifiers originally built from kits can be a problem, particularly if the intention is a partial modification. In such cases, the builder is at the mercy of the original kit builder. Occasionally, one finds a kit which has been built with excruciating care, but such a delight is rare. More often, the Citation just bought for $10 at a swap meet contains $10 in solder alone.

In selecting a candidate for modification, goals must be defined before selection criteria can be met. The audiophile looking for any chassis with a power supply able to support the "ultimate" preamplifier circuit will be less selective than the reader who specifically wishes to buy and upgrade a mint McIntosh C20. The criteria, then, must be set based on intentions. The following items should be considered:

control flexibility - will the unit provide the control functions desired?

chassis space - is there sufficient space for the mounting of necessary chokes and capacitors, as well as the required number of tube sockets?

power supply - will the transformer itself provide sufficient energy for the circuit contemplated?

condition - does the general condition of the chassis and case warrant the effort and money?

accessibility - will it be possible to physically reach all necessary parts of the circuit?

circuit design - is the unit built up with cordwood construction or on a circuit board?

parts availability - are there any parts utterly peculiar to that preamplifier which should be replaced?

cosmetics - will a new faceplate be required?

jacks, plugs, switches, and potentiometers - do they need replacement?

Of all the vacuum tube preamplifiers on the market, the most frequently encountered, and one of the best bargains, is the Dynaco PAS. It is extremely easy to work on, since literally no part of the circuitry is tucked away in shielded spaces; every component is easily accessible. The circuit is installed upon printed circuit boards, which are easily modified. There is sufficient space in the chassis for all required components, and the power supply will support at least one additional tube, if required. Further, the PAS can be simplified by removal of the tone controls, dressed up with a new anodized faceplate, and the result will be attractive.

A far more complex and frustrating candidate for modification is the Citation II. This unit will permit greater flexibility of the finished product, has a lot more space in the chassis, and will be more impressive in appearance when finished. The sonic result will, however, be virtually identical to that achieved with the PAS, which is a far easier job.

Printed circuit boards are an important factor if the builder is relatively inexperienced. The effort required is less, errors are more easily detected and corrected, and the finished product is neater and more accessible. Further, since all components lie in one plane, reduction of noise is somewhat easier. Of course, in examining a candidate with printed circuit boards it is necessary to ensure that sufficient space exists for the new component values, or that components of the necessary size are available in the required values. A one-microfarad capacitor, rated at 400V, can range in size from one-half cubic inch to four cubic inches. Obviously, both may not fit in the space once occupied by a 0.1 mfd/200V capacitor. The reader, then, must make his plans carefully; he should first decide exactly what must be done to satisfy his requirements, select a candidate which will support the expected result, and ensure that parts will fit!

Determination of the "final result" can be bit of a problem, as a number of possible trade-offs will arise. The inclusion of tone control circuitry, for instance, is a major issue. It is possible to build up an extraordinary circuit, the performance of which will be virtually destroyed by tone controls. Even those units equipped with a switch supposed to "remove tone controls from the circuit" will often show a distinct change to an oscilloscope presentation as the tone controls are moved, regardless of the position of that switch; the Audio Research Corporation SP3A is an excellent example. The author recommends that tone controls be eliminated from the circuit entirely, and that the resulting product be listened to carefully before any sort of equalizer is added. The utter purity and detail of the sound may be so attractive to the audiophile that the addition of an equalizer just does not seem important. A slight deficiency in low frequency performance of the overall system can often be corrected with small changes in speaker placement. Excessive low frequency output is often a speaker problem, but occasionally results from feedback to the turntable; that problem is easily solved with the purchase or construction of a seismic platform. The tweeter controls on the speaker can often be used to correct small errors in high frequency response. Those audiophiles intending to bi-amplify can use the level controls of the electronic crossover or the power amplifiers to balance the overall sound. In short, many problems normally solved with tone controls can be tackled by other means; the absence of tone controls certainly reduces the flexibility of the preamplifier, but the sonic results can be quite rewarding. If tone controls are a "must," and there is no real way of switching

them into and out of the circuit, then the audiophile begins his project with acceptance of a major compromise.

The use of a multi-band equalizer is often necessary, due to room acoustics and/or program material. If such a device is to be used, the preamplifier circuit must be planned accordingly. The relatively low input impedance of solid state equalizers usually makes it mandatory that the tape output circuit include a cathode follower tube. Though a nearly distortionless impedance matching device, the cathode follower reduces gain somewhat and also imposes an additional load on the power supply. The "purest" of systems would be cartridge to tube preamp to short, low capacity cables, to high impedance input of either amplifier or crossover, without benefit of any cathode followers, tone controls, equalizer, noise suppressor, or other low impedance device.

Obviously, if use of a solid state amplifier or crossover with a relatively low input impedance is planned, the main output of the preamplifier must be equipped with a cathode follower. If the original unit to be modified already includes cathode followers at the tape output and/or amplifier output, the problem is greatly reduced. Addition of a cathode follower to a circuit which had none before construction began can be a problem involving several hours of work. Another point which should be considered is the effect of a solid state device wired to the tape output jacks. Even if the tape monitor switch is in the "source" (or similar) position, the load imposed by the solid state device on the portion of the preamplifier circuit preceding the tape output jack may have a significant effect on the overall performance. That is, if a tape recorder, noise suppressor, or equalizer is plugged in to the tape output jacks, performance may suffer whether that unit is being used or not.

These arguments should certainly affect the choice of the many candidates for modification; the trade-offs involved are considerable, and the amount of work varies depending upon the ultimate result desired or required. One of the most frustrating possibilities is the laborious construction of the "ultimate" preamplifier, only to find that it just will not work properly with the rest of the system. That situation can be easily avoided by giving careful thought to the modification candidates and processes prior to beginning construction.

notes

chapter five

circuit components

POWER TRANSFORMERS

The power transformer provides the energy which, in nearly all preamplifier circuits, powers every aspect of operation. All power transformers used in vacuum tube units have at least three windings; the primary, the high voltage secondary, and a filament winding. Many have more, including an additional primary winding (or center tap) to permit a choice of 110/220V operation. Some have a separate filament winding for the rectifier tube, and a very few have more than one high voltage secondary. The transformer present in any given candidate for modification must be evaluated for suitability. If it is possible to acquire at least 400V at 15 milliamperes from the rectifier, by any means, it will work. The presence of a center tap on the high voltage winding (plate supply) will make the rectification job easier, but it is not a critical factor. Any transformer, regardless of center tap, must produce a minimum of 889V RMS AC across the total high voltage secondary; after rectification, voltage will be 400. If a center tap is present, rectification will be by a conventional full wave circuit. If there is no center tap, a full wave bridge must be built, which requires either four tube rectifiers or four silicon diodes. Obviously, the Si diodes will occupy less space and generate less heat.

The transformer of choice will be shielded; electromagnetic radiation from an unshielded transformer may make the hum

TYPICAL POWER TRANSFORMERS

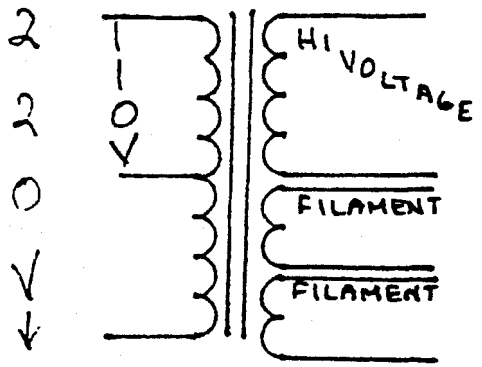

This represents a unit with a choice of input voltage. No center tap is provided in the high voltage winding, which means that either a full wave bridge rectifier or a simple half wave rectifier must be used. Two filament circuits are provided. One is probably intended for the tube rectifier, the other for the remainder of the circuit. In some power amplifiers, the third winding may be intended for a bias voltage source for the output tubes.

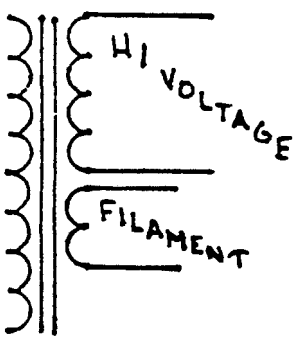

This transformer is similar to the first unit, in that no center tap is provided. This winding arrangement is probably intended for use with solid state rectification (half wave or full wave bridge) because only one filament winding is present. Seldom would the same filament winding be used for both the recrifier and associated circuitry.

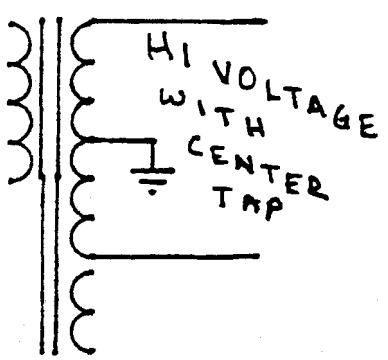

The center tap, shown here, greatly increases options available. Any of the possible rectifier circuits may be used, depending upon voltage required.

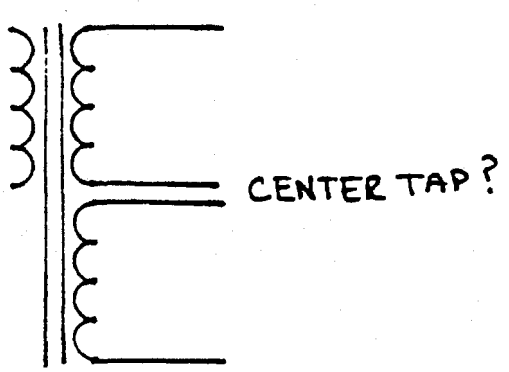

This arrangement shows the high voltage winding(s) divided, permitting more than one high voltage source or combination, with or without center tap, to provide a higher voltage source. If the two center leads are correctly identified, joined, and grounded, the overall winding is center tapped. If the windings are connected in parallel, the resulting circuit will have more current carrying capacity. Such a transformer offers the ultimate in circuit flexibility.

Figure 4a

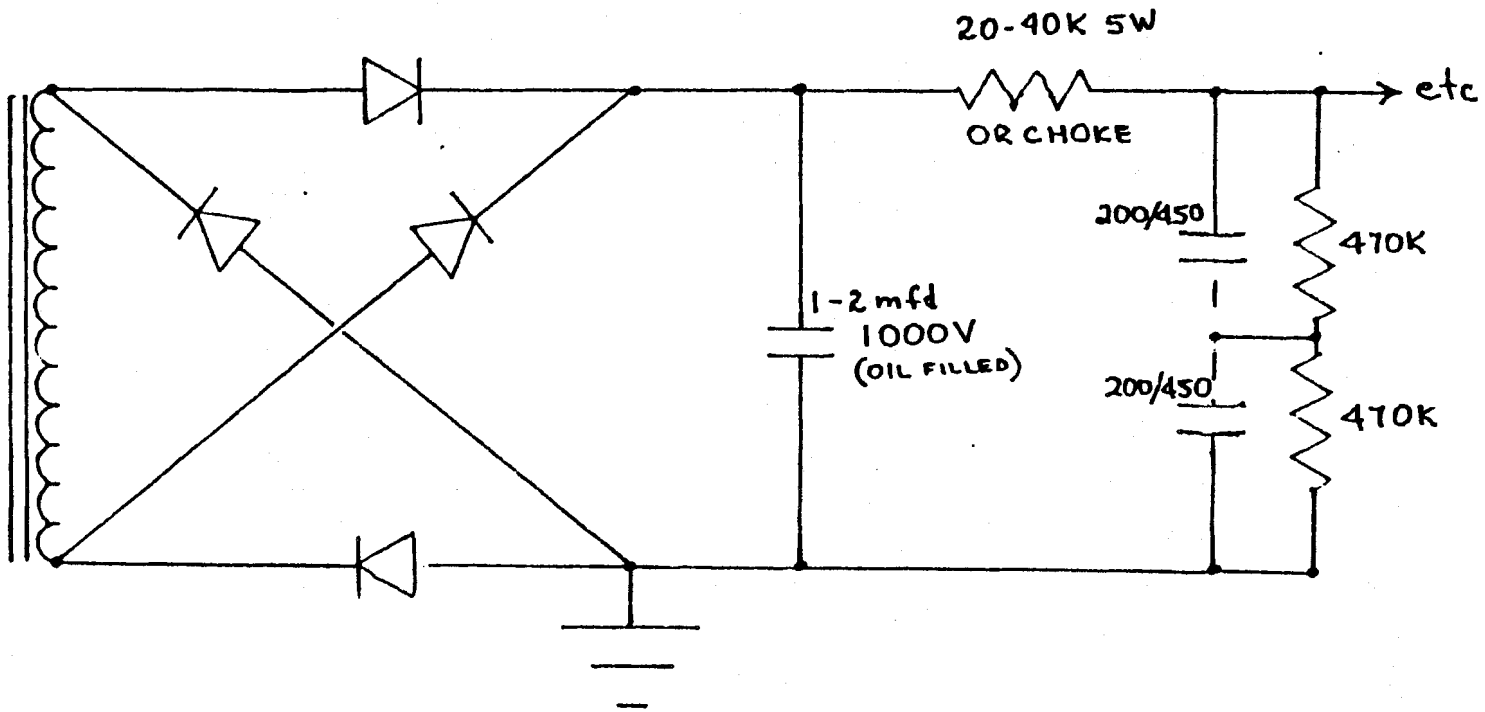

Figure 4b

This "last resort" circuit should be used when the existing power transformer provides insufficient voltage. If the transformer can support the current flow through the preamplifier circuit, with this arrangement, extremely high voltages are available. The 470k resistors (any near value can be used, but the resistors should be matched) ensure an equitable distribution of voltage across the electrolytic capacitors.

The power resistor will get hot; adequate ventilation and/or heat sink is important.

RECTIFIER CIRCUITS: SOLID STATE FULL WAVE

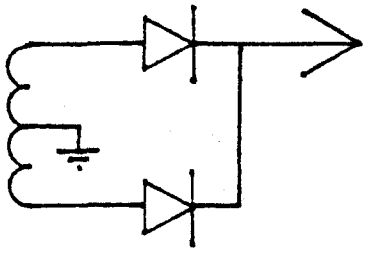

This is the simplest of the full wave (center tap) circuits. It assumes that the rectifiers are such as to carry the required current at the voltages present.

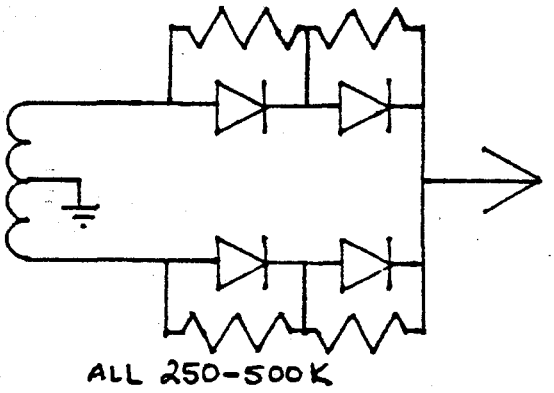

This circuit is required when voltages are beyond the capability of a single rectifier. The resistors are used to divide the voltage between the two series rectifiers, and should be of the same value (but not necessarily matched).

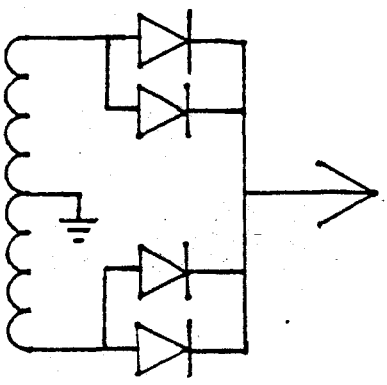

When current requirements exceed the capability of a single rectifier in each leg, this circuit is used; it divides the current between two rectifiers.

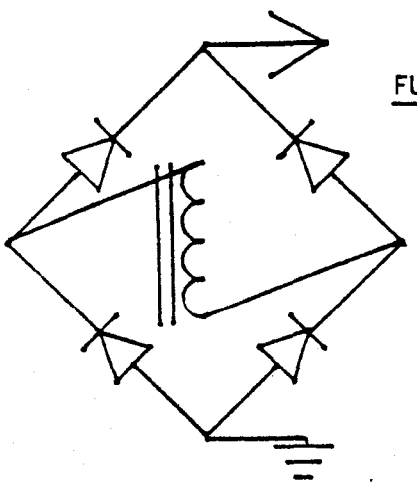

FULL WAVE BRIDGE

The full wave bridge is used when no center tap is provided on the power transformer. Though more complicated, all of the above techniques can be used to increase either voltage or current carrying capability of each rectifier element. The full wave bridge is particularly suited for filament power supplies.

Figure 5

problem insoluble unless an "outboard" power supply is built, on a separate chassis. Figure 4 illustrates typical schematic representations of power transformers, and some methods of overcoming limitations of the original components.

RECTIFIERS

The rectifiers found in vacuum tube preamplifiers may be any combination of three types. The thermionic (tube) rectifier may be either full or half wave, depending upon the power transformer with which it is used. Selenium rectifiers are often found in the filament circuit. Only a few preamplifiers use smooth DC on the filaments of the tubes; the majority use either AC, with a hum balance control, or partially filtered pulsating DC. There appears to be little evidence to indicate a substantial decrease in noise level when filament supply is changed from AC to pulsating DC, if leads are tightly twisted and routed properly. The difference between either of these supplies and smooth DC, however, can be significant. Every purist will use DC on preamp filaments, and a few go so far as to use an external automobile battery in order to ensure absolutely ripple-free filament power.

As explained elsewhere, the choice between silicon diodes and a tube rectifier involves trade-offs among several factors, including space, heat, rate of capacitor charge on turn-on, overvoltage on the preamplifier circuit, and others.

If silicon diodes are used, they must be selected and installed carefully to ensure compatibility with the circuit. The 1N4007 can withstand a peak inverse voltage up to 1000V, and is the obvious first choice for nearly all preamplifier circuits. Installation of this diode requires extreme care to ensure that the diode is not damaged by the heat of soldering; some sort of heat sink is mandatory. For extremely high voltage applications (over 950V), four 1N4007 diodes, in series pairs, should be used, with equalizing resistors, as shown in Figure 5.

CHOKES

Ideally, all chokes used in a preamplifier circuit should be shielded, but this is not practical due to the scarcity of such items. Chokes of any sort are becoming more and more difficult to find, and to buy a newly manufactured one may necessitate a larger order than the average audiophile will use up in years. Unshielded chokes must be carefully installed on the chassis in order to avoid a hum problem produced by the inductive field. In many cases, it is possible to equip each choke with rather long leads and then mount them all together under a metal "cage," which should serve to reduce any radiating energy. The values which may be used

are, to a degree, dictated by size. Obviously, the larger the inductance (all else remaining equal), the larger the choke. For preamplifier applications, almost any choke of five to 25 Henrys is acceptable. When a choke is used to replace a resistor in order to produce more voltage from the circuit, it is mandatory that the DC resistance of the choke be lower than that of the resistor it replaces. That will ensure that the voltage drop is lower across the choke than across the resistor, and more voltage will appear at the output of the circuit. The three factors governing size of a smoothing, or filter choke, are inductance (in Henrys), DC resistance (in ohms), and current handling capability (in milliamperes). The ideal preamplifier choke will occupy about two cubic inches; ten Henrys, 1400 ohms, and 15 milliamperes. No current product matches these specifications, but many suitable chokes have appeared on the surplus market at from 10¢ to 75¢ each, depending upon quantity and the mood of the seller. Other chokes can be used, of course. It is only necessary that the choke be able to carry about 15 milliamperes, have a lower resistance than the resistor it replaces, and provide at least five Henrys of inductance. If such a choke is located, and will fit somewhere in the power supply section of the chassis, buy it!

The search for chokes in the surplus outlet should be centered on the transformer bins or racks. Look for a unit with only two leads--it is a choke. If it is about the right size, and a pocket ohm meter indicates a DC resistance between 700 and 2500 ohms, it will probably serve the purpose. If the shopper has access to an inductance bridge, better yet. Very few chokes have been manufactured with a current rating below ten milliamperes, so even without test equipment an "unknown" choke should be no problem. Further, the DC resistance is a good aid in guessing at the inductance.

ELECTROLYTIC CAPACITORS

This type of capacitor is usually manufactured in an aluminum can, with tabs for chassis mounting or axial leads. The unmodified preamplifier will always have at least four such capacitors, though they may be combined into one can with four contacts, or terminals. Typically, the original capacitor will be rated at either 350 or 450 volts. Without benefit of schematic or specifications, this is one means of determining the suitability of a preamp candidate for modification. The few units in which the voltage in the B+ circuit is much less than 350V are probably going to pose grave problems in getting the voltage up to 400. Other types of electrolytics are made, including those such as the Sprague TVL 1720, which provides 200 mfd at 450V, has a skintight plastic wrap, and two long leads coming from one end. This capacitor, and others similar in construction and capacity, are ideal for preamplifier applications, as they will fit into confined spaces and are easily

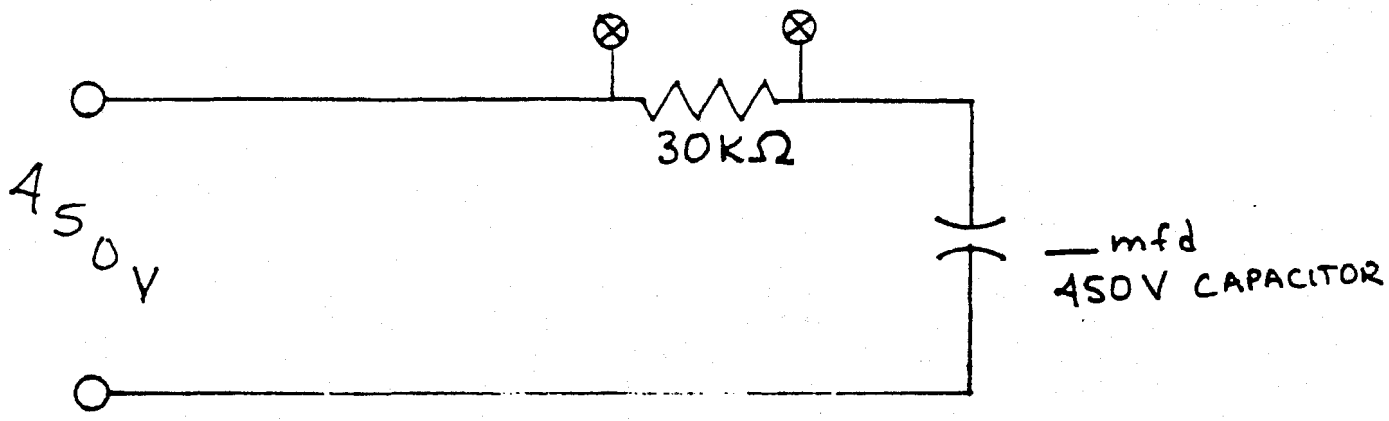

The process of reforming an old electrolytic capacitor consists of the application of rated voltage through a resistor. Initially, there will be considerable current flow, causing a great voltage drop across the resistor. As the capacitor reforms, current flow drops. Finally, the voltage drop across the resistor can be used to determine the condition of the capacitor. In the example above, a drop of more than twenty-five volts after one hour of reforming indicates a capacitor in marginal condition.

Most manufacturers recommend a reforming process in which the capacitor is charged for five minutes plus one minute for each month of storage, or non-use. The electrolytic capacitors typically appearing on the surplus market have been in storage for a very long time indeed. An upper limit of one hour is recommended, for these capacitors, because if more time than that is required the internal condition of the unit is questionable, and its lifetime will be reduced. Such borderline capacitors can be used, but should be included in circuits which are to be left on continuously.

The reforming process is potentially dangerous. Modern electrolytic capacitors are fitted with a rubber or plastic plug, which 'pops' if internal pressure rises excessively. The fluid which is then expelled is corrosive and extremely irritating, particularly to the eyes. Another hazard exists due to the high voltages present. It is easy to 'forget' that the capacitor(s) laying on the workbench are wired to a high voltage source, and accidentally touching exposed wires can be a shocking experience. Further, a good capacitor will retain most of its charge for some time. It is recommended that once a capacitor is formed, it is discharged through a resistor equal to one ohm per volt.

The source of the high voltage required during the reforming process can be a conventional power supply or a capacitor checker with a built-in high voltage source.

Figure 6

wired into the circuit. Other high capacity, high voltage capacitors are made by several manufacturers. Unfortunately, they are difficult to locate. On the surplus market there are many such components but, due to lengthy storage, one major problem arises. The failure rate of such capacitors is relatively high, and there is normally no recourse. Manufacturers claim that most old electrolytics can be saved if the correct procedure is followed, regardless of how long they have been unused. Such capacitors must be "reformed": this process consists of applying rated voltage through a resistance (about 30,000 ohms, one watt) for five minutes plus one minute for each month of storage; see Figure 6. As the capacitor reforms, the voltage across the resistor will drop (measured at the Xs in Figure 6). If that voltage will not drop to below 25V after one hour, the capacitor is probably beyond help. A new capacitor should rapidly take a charge right to rated voltage, in which case only a small voltage drop will appear across the resistor. It is possible to reform capacitors in the circuit, of course, but if rectification is by solid state diodes and there is a large current flow, it is possible to destroy one or more of the diodes or damage the transformer.

Electrolytic capacitors can be dangerous. They can be charged to capacity and will retain that energy for quite a while. If the terminals or associated circuitry are touched, a severe shock and burn may result. After reforming, it is a good practice to discharge the capacitor through a resistor equal to about one ohm per volt of charge.

Another hazard associated with electrolytics is "spitting." Each of these cans is filled with, among other things, a thick fluid which can be extremely irritating. A small rubber safety plug is fitted to most electrolytics of recent manufacture. When the capacitor fails, internal pressure may go too high; the plug will blow and the fluid will spit out.

Electrolytic capacitors of a given capacity and voltage will vary considerably in configuration and size, from one manufacturer to another. Ideally, there will be chassis space to permit mounting the "twist-lock" variety. Otherwise, the tubulars (such as the Sprague TVL 1720) must be packed, glued, or clipped wherever space is available.

FILM CAPACITORS

Mylar, polycarbonate, metalized paper, and other types of conventional capacitors appear in abundance in vacuum tube electronic devices and, of course, on the surplus market. Before buying new capacitors, check those already used in the preamplifier to be modified. Often, if the old circuit has a 0.01 mfd between two points and a 0.1 mfd capacitor between two others, the latter capacitor may serve well in the the first position. These components vary enormously in size, depending upon

"BUILDING UP" REQUIRED CAPACITANCE

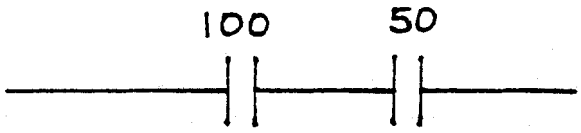

= 33.3

$\frac{1}{100} + \frac{1}{50} =$

$.01 + .02 = .03$

$\frac{1}{.03} = 33.3$

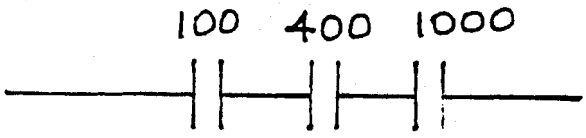

= 74

$.01 \quad .0025 \quad .001 = .0135$

$\frac{1}{.0135} = 74.07$

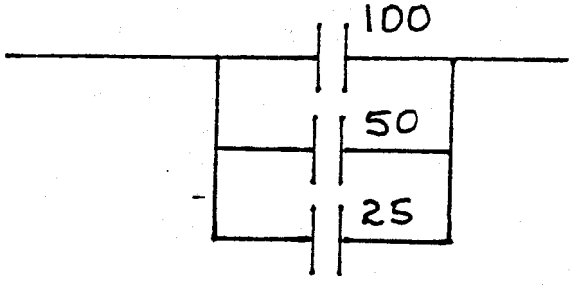

= 175

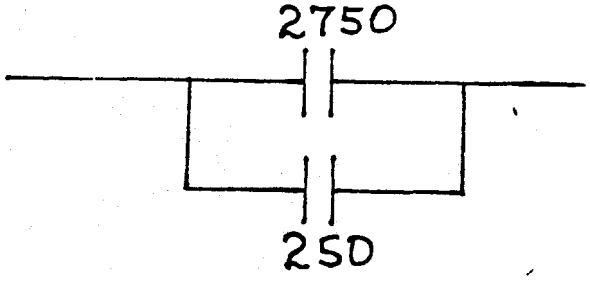

= 3000

When a circuit requires a specific capacitance which is not available, it can be built up from other units, as shown above. To create a lower capacitance, wire two or more capacitors in series, as shown in the first example. The total capacitance is the reciprocal of the sum of the reciprocals of the two capacitors in series. To create a higher capacitance, wire the capacitors in parallel. The total capacitance, as shown above, is the sum of all the elements.

Figure 7

capacity, construction, and rated voltage. A 1.0 mfd 400V capacitor may vary in size from one-half cubic inch to more than three cubic inches. All capacitors connected to tube plates should be rated at 400V or more. Obviously, a major criteria in selecting capacitors will be the space available on the chassis, or printed circuit board. Some of the names and numbers to look for, on the surplus market, are Erie, Sprague 277P, Elpac, and TRW. Though it is possible to buy suitable capacitors new--and they are still manufactured--a 1.0 mfd 400V coupling capacitor will cost about $1.50 retail and as little as 10¢ surplus!

The sonic qualities of these capacitors seem to vary somewhat, though the differences are the subject of argument among audiophiles and technicians alike. Most agree, however, that if there is a significantly "better" capacitor it is the polycarbonate, which (of course) is both the most expensive and most difficult to locate, especially in the higher voltage ratings. A look at the recommended schematics, however, will show a 400V capacitor at the output of both the phono circuit and the high level circuit, followed by another capacitor, the rating of which can be as low as 50V. This is because it is the first of the capacitors which blocks the high voltage of the plate from the rest of the circuit, and the second capacitor is exposed only to slight voltage. Polycarbonate capacitors are recommended in low voltage applications.

PRECISION CAPACITORS

Industry produces precision capacitors of several types, ranging in tolerance from 5% to less than 1%. The most commonly encountered is the dipped silver mica, which can be used in the equalization circuit of the phono stages, the feedback network of the high level circuit, and between grid and plate and grid and cathode of the first tube. It is essential that voltage rating be checked carefully; most silver mica capacitors are rated at 500V, but some are rated as low as 100V, and will fail when exposed to typical tube voltages. New prices of the required precision capacitors range from 25¢ to $1.50, depending on value and tolerance. On the surplus market, capacitors of extreme precision can be bought for as little as a nickel each. In many cases where a specific value is required, it is possible to "build it up" with available capacitors in series and parallel, as shown in Figure 7.

In a series circuit, the total capacitance can be found by adding the reciprocals of each unit, then finding the reciprocal of the sum. In parallel, just add the capacitances. It is quite easy to add capacitors in parallel to those already in a circuit in order to acquire new, larger, values. In the Dynaco PAS, for instance, one of the precision capacitors measures 2750 picefarads. The new circuit calls for a capacitor

of 3000 picofarads. Rather than shop for a new 3000 pFd capacitor, just add a 250 pFd in parallel with the original unit.

RESISTORS

The vast majority of resistors prevailing in commercial preamplifiers are of the carbon composition variety. This is the cheapest sort of resistor which suffers from several ills and has few advantages. At best (when new), it is within 5% of the rated value, and its resistance can be expected to vary considerably with temperature and age. Further, this type of resistor is extremely noisy. The only advantages of the carbon composition resistor are low cost and small size (for the power rating).

A great improvement over the carbon composition resistor is the carbon film unit. It is more stable, more accurate (usually less than ±5%), and far less noisy. Though they cost considerably more when purchased on the retail market, they can be purchased for as little as 2¢ each at a surplus outlet, and that is less than the retail price of a composition register!

The best of the resistor types available from any source is the metal film component, which is extremely stable, accurate to one or two percent, and almost noise-free. The metal film resistor is relatively large for its power rating, but should be sought for every preamplifier project because of its extraordinary performance. Though the cost of metal film resistors is prohibitive (over $1) on the retail market, they can be purchased at from 5.5¢ to 15¢ each on the surplus market. The power rating of the resistors is expressed by the number printed on the body. All resistors wired to a grid or EQ circuit can be rated at 1/8 watt; acceptable numbers are RN 60, 65, 70. All resistors wired to the plate or cathode of a tube should be marked RN 70 or 75. The letter which follows is a temperature coefficient and is of little significance in preamplifier applications. On some metal film resistors there is only a coded resistance marking. The last digit of that code indicates the number of zeroes to be added to the remainder of the digits. A marking of "4703" indicates a 470,000 ohm or 470K resistor, and a marking of "4700" is a 470 ohm resistor.

Another frequently encountered type of resistor is wire wound; this type has the highest power rating, for a given size, of any. They often look like carbon composition resistors, but the first of the color coding bands will be twice as wide as the rest. On the surplus market they are so cheap it is worth breaking one open to ensure it is the sort you expect it to be. Wire wound resistors may never be used in the signal path, but are ideal in the power supply. The reason they are not suitable on the plate or cathode of a tube is not noise--

POTENTIOMETER TRACKING

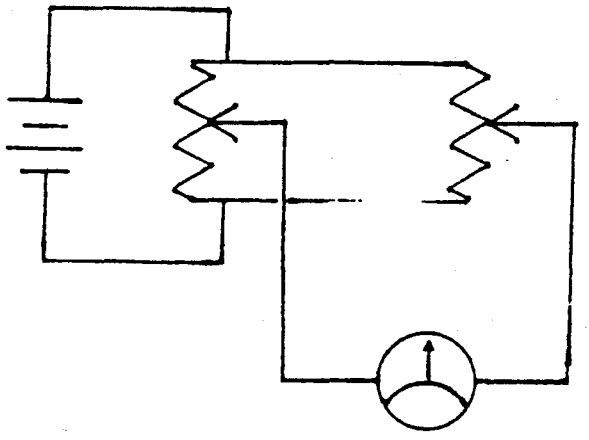

This circuit illustrates one method of validating the tracking of any dual potentiometer. Any voltage difference between the two sections of the 'pot' will show up as a fluctuation on the meter. The object is to locate a pot which tracks perfectly, with no drop-out or variations in resistance other than that expected.

To do this job, wire the two pair of 'end' terminals of the pots together. Wire the meter across the center terminals, and the battery (9V) to the joined terminals of the two pots. Rotate the shaft slowly, from one extreme point to the other, noting any fluctuations in the meter. High quality ganged pots, and accidently 'good' cheap pots, will track nearly perfectly. Most cheap, or faulty, pots will show dropouts or great voltage variations. If the process is repeated several times, extremely slowly, it is possible to detect very small problem areas which might result in noise.

Figure 8

they are extremely quiet. It is because they are, in fact, wire wound--and that means a coil, or inductance. Adding inductance to the signal path may have a serious effect on the high frequency performance of a high impedance circuit.

CAUTIONS

It will often be necessary to "cram" a large resistor into a relatively small space on a printed circuit board. In such cases, fold the leads toward the center of the resistor, then make a sharp bend at the proper point on each lead. Some of the metal film resistors show exposed metal, such as the Welwyn brand, made in Canada and frequently found on the surplus market. This means that the metal film, wrapped around the body of the resistor, is exposed and "hot," and can cause a short if another piece of metal should touch it. Avoid the glass resistors, though they are potentially excellent; in high voltage applications they seem to have a high initial failure rate. These resistors are often banded in a manner similar to composition resistors, but they usually have a hard shiny finish and visible caps of metal at each end, or a light blue matte finish with values printed on the body.

POTENTIOMETERS

Few components seem as innocuous yet are as potentially deadly (to sound) as potentiometers. The average audiophile will build a device in accordance with specifications, using precision parts and extreme care, and then wonder at the failure of his new component to meet his expectations. Often, subtle deficiences can be attributed to potentiometers. Even the very "best," on an absolute scale, can be quite poor in audio applications. Many precision potentiometers are wire wound, which involves, of course, a significant inductance. A few precision potentiometers are of the carbon track type; though non-inductive, carbon "pots" usually suffer from a noise problem after some hours of use. Noise and inductive reactance can be significant, but the most insidious problem arising with pots is in neither of these categories. Stereo separation, stereo imaging, and channel balance can all suffer if the potentiometer does not track accurately. That is, the pot must vary its resistance in strict accordance with its type, whether it be linear, audio, or log taper. Dual pots are common in audio equipment; they can be found in the gain control, the balance control, and elsewhere. It is of great importance that each dual pot be checked carefully for accuracy in tracking. This procedure is simple, but requires an accurate voltmeter; see Figure 8.

Connect the potentiometer, meter, and battery as shown, rotate the pot through its travel, and note the meter; any significant fluctuation should disqualify the potentiometer for precision use.

Audio applications usually require potentiometers with an audio taper. The difference between audio, linear and log taper is the the rate of change of resistance as the wiper moved around the track. The audio taper potentiometer changes resistance at a rate roughly equivalent to the manner in which the ear-brain system judges variations in loudness; hence the term "audio taper."

Another point to consider is the desirability of a loudness circuit, which--when switched in--provides low frequency boost at low volume levels, in accordance with the Fletcher-Munson curve. That curve is claimed to be a measurement of the relative sensitivity of the listener to low frequencies at different volume levels. If a loudness circuit is to be used, and it is advisable in a preamplifier without tone controls, then the potentiometer(s) selected for the volume control should be "tapped" appropriately. Physically, this means that in addition to the customary three solder terminals, there will be a fourth on each pot, usually located on the side away from the basic three.

Whether at a retail outlet or a surplus store, the builder should seek a high quality, carbon track, audio taper potentiometer, and each purchase should be checked for accuracy. A good surplus "pot" should cost about 25¢: at retail, it might run as much as $2.

SWITCHES

The most basic preamplifier will require at least one switch to turn the unit on and off; the more complex the unit the more switches will be required. The cheapest of the several options is the slide switch, which can be purchased in several configurations.

To enhance reliability and appearance, however, it is recommended that high quality miniature toggle switches be used, despite the higher cost involved. That cost, by the way, may be recovered if a face plate is to be made at a local metal shop. Round holes are far less expensive than rectangular ones!

Like potentiometers, switches can become noisy, though the noise is usually evident only when the switch is moved. Slide switches, due to their open construction, often become dirty and, therefore, noisy. Subminiature switches should not be sought unless space is a major factor, simply because a good double pole double throw miniature can cost as much as $4, and the next size up runs about half that, even on the retail market.

JACKS, PLUGS, CABLE, LINE CORDS AND HARDWARE

Preamplifiers operate at extremely low signal voltages, which means (among other things) that they are quite susceptible to hum and noise pickup. The grounding route at the input/output jacks and in the phono circuit is often a major problem. The very best of the RCA phono jacks, then, may be the worst choice for this application. The "best" refers to those with a screw base and nut, while the cheapest are mounted in multiples on phenolic strips. The problem with the first variety is that each makes ground contact with the chassis, which can create one or more "ground loops." On the other hand, the cheaper variety requires a separate solder joint at the ground terminal of each jack. This makes it possible to select the ground path and avoid redundancy, which is often the cause of hum. Further, each phono jack should be slightly squeezed to ensure good contact when a plug is inserted. The phono plug, however, should be of the best available quality.

In a high impedance circuit, the capacitance of shielded cable becomes important; those cables offered by most retail outlets are simply unacceptable, as they range up to 100 picofarads per foot. A "good" selection will be cable with capacitance of less than 20 picofarads per foot. Such cable is available from surplus outlets, and should be sought. Braided copper (solderable) shielding is preferred over any other, and a multi-stranded center conductor is a must. Line cord need only be stout enough (perhaps 18 gauge) to supply the preamplifier, as the preamp on-off switch should operate only the preamp itself. This will reduce the number and intensity of AC fields in the preamp chassis. The field around a wire varies directly with the current flow. If the wiring within the preamplifier is to carry the current required by a power amplifier, or other components, hum problems may arise.

Every component in the system should be fuzed, including the preamplifier. Many commercial units are built with no fuze at all; this category includes the Dynaco PAS. Lack of a fuze can be expensive, since failure of a circuit component can cause the transformer to fail. Two types of fuze installations are recommended, depending upon the characteristics of the unit being modified. A chassis-mount fuze block is simple to install and quite inexpensive, though it is necessary to "get to it" if it should fail. A capped fuze receptacle can be mounted in a hole drilled in the chassis edge, which makes the fuze itself quite easy to replace. In any case, the preamplifier power transformer should be the only item fuzed; no accessory AC plugs should be in that fuze circuit. If solid state rectifiers are used, the fuze must be of the "slow-blow" variety, since there will always be a current surge after turn-on, while capacitors are charging. Tube rectifiers, on the other hand, begin conducting rather slowly and impose less of a burden upon the transformer and fuze. In the circuits recommended in this manual, extremely large capacitors are used;

as they charge, current drain can be much larger than during normal operation.

WIRE

The cheapest wire is certainly the best, in one sense. The very finest MILSPEC teflon wire can be bought for pennies on the surplus market, while 20 gauge vinyl wire, in the retail store, is little cheaper than gold. Teflon wire is, without question, the finest of the several options available. It is virtually impervious to the temperature encountered in vacuum tube equipment, is typically of very fine quality and consistency, and has no disadvantages whatever.

SOLDER

Every kit marketed in the past 25 years has contained instructions bearing the admonition "use rosin core solder only; warranty void if acid flux is used." Poor solder joints in a preamplifier can be the cause of many headaches ranging from a sensitivity to radio signals to hum at an intolerable level. The reader is cautioned to ensure that literally every solder joint in the modification candidate is reheated and triple checked. Any cold solder joint is a potential crisis....

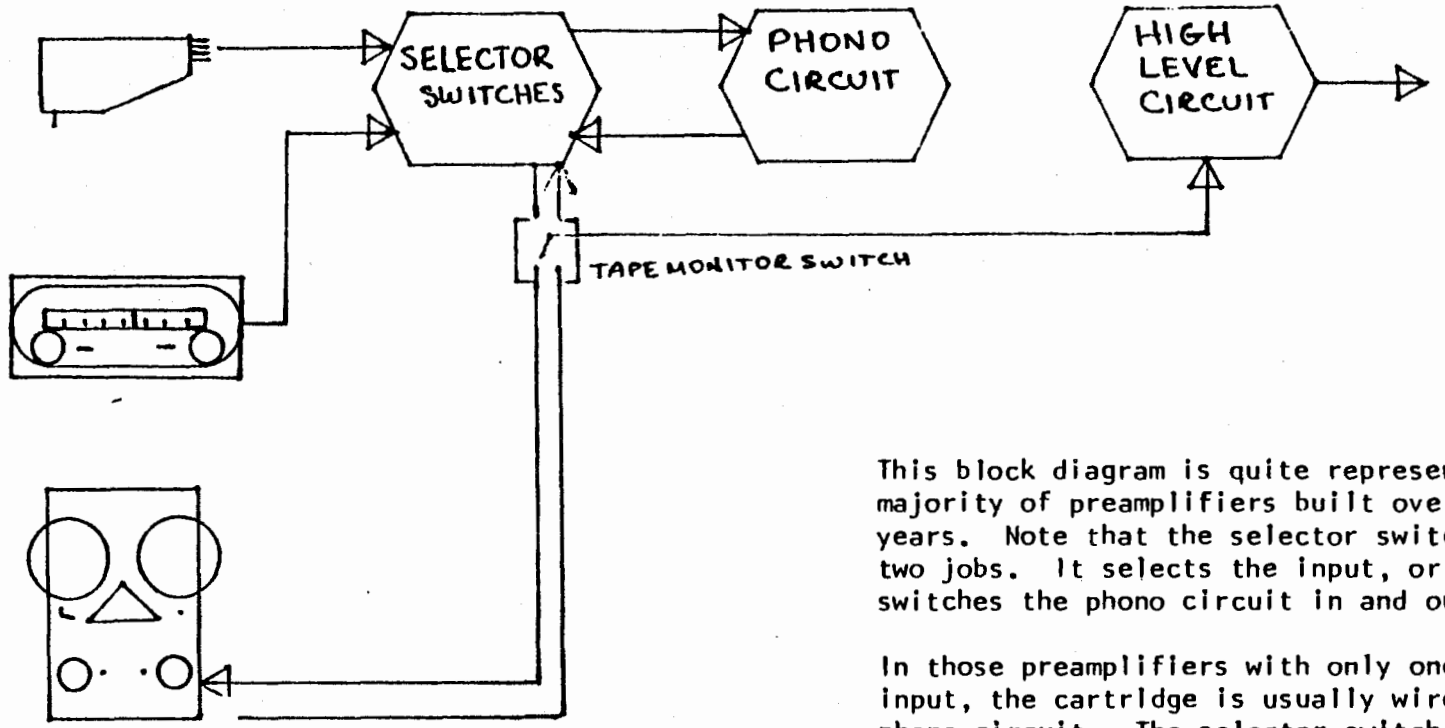

This block diagram is quite representative of the vast majority of preamplifiers built over the last twenty years. Note that the selector switch does at least two jobs. It selects the input, or source, and also switches the phono circuit in and out of the circuit.

In those preamplifiers with only one phono (magnetic) input, the cartridge is usually wired directly to the phono circuit. The selector switch then need only treat the output of the phono circuit as another high level input, and switch from that source to the others as required.

Those preamplifiers with tape head and/or microphone inputs in addition to magnetic phono cartridge inpu will usually include equalization circuitry in the selector switch circuit. Unless it is expected that the tape head or microphone capability is to be retained, these elements should be removed. Optimum performance will be attained when the equalization network is 'hard-wired' to the phono stage, avoiding the noise and capacitance inherent in switch circuits.

Note that the tape output jack is in parallel with the input to the high level circuit, and that no switching provision exists for disconnecting the tape recorder, or other component, from the tape output circuitry. If a low impedance device is wired to the tape output jack, a low impedance load will be present whether the device is turned on or not, and whether the tape monitor switch selects 'tape' or 'source'.

Figure 9

notes

chapter six

tube preamplifiers: characteristics and operation

The preamplification function can be accomplished in a variety of ways; there are as many different circuits as there have been products. In literally every case, the commercial offering represents a number of compromises, or trade-offs, in cost, performance, size, weight, durability, utility, flexibility, functions, and other factors. Despite the literally hundreds of circuits which have reached the market, with only a few exceptions, they can be reduced to a simple block diagram, as shown in Figure 9. Once separated into blocks, the most sophisticated preamp circuit can be understood well enough to permit selection of a suitable modification.

Analysis of a phono circuit will usually show two amplification stages plus, in some cases, a cathode follower output. In order to achieve adherence to the industry standard equalization curve (RIAA), most commercial preamplifiers use a feedback circuit between the output of the second stage and the cathode of the first stage. This circuit does a very specific job; it modifies the output to conform to the RIAA curve. Since a cartridge is a velocity sensor, the output increases as audio frequency increases. This requires tremendous boost at the lower frequencies or a similar degree of cut at the higher frequencies. The feedback circuit itself can consist of resistors, capacitors, and chokes though modern practice (1955 or so) calls for resistors and capacitors only. The desired results can be

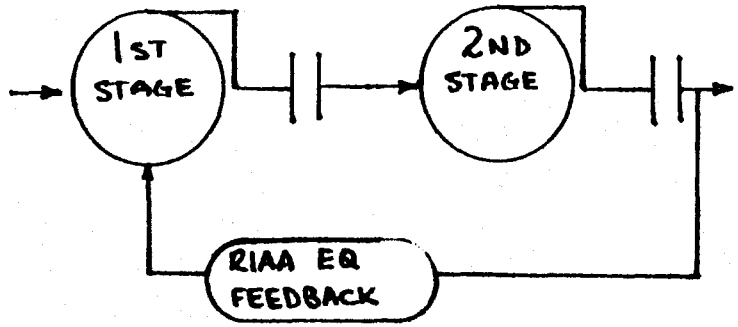

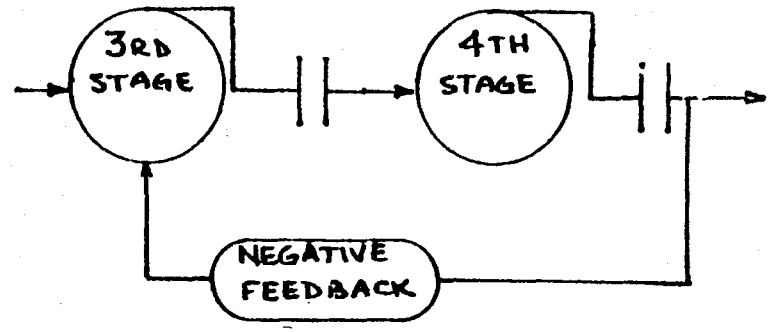

OR

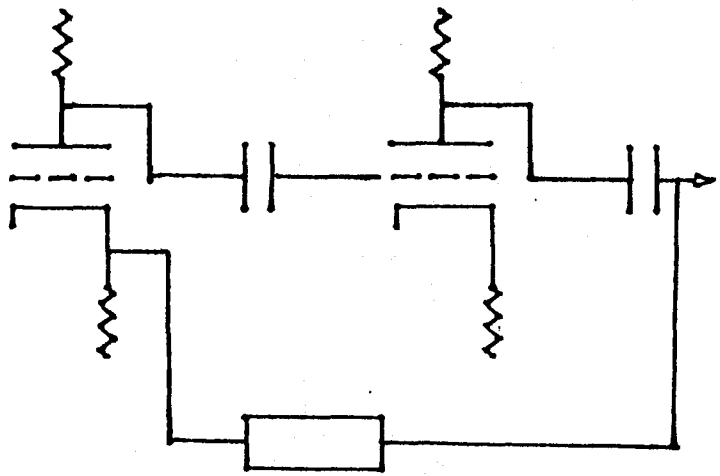

This is a typical phono stage. Most of the important circuit elements are shown. Note that RIAA feedback, in this circuit, begins after the blocking capacitor and returns to the first stage.

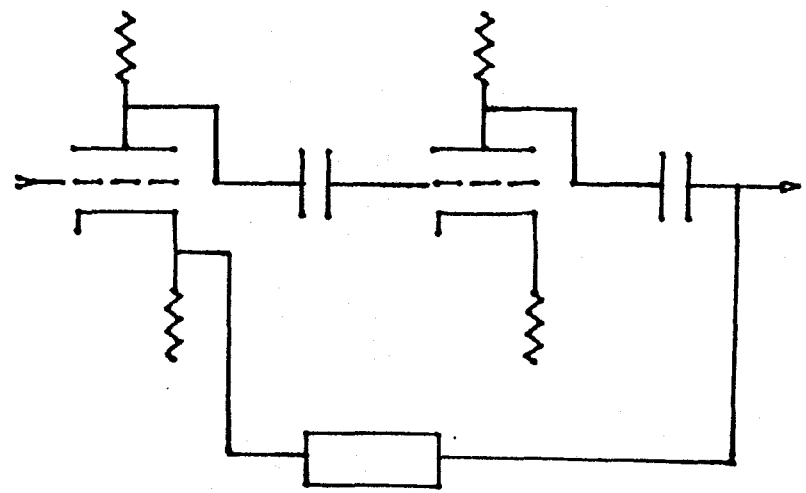

This is a typical high level stage. In most cases, two stages of amplification are not necessary, but since each stage inverts phase, two are used in order to ensure that output is 'in phase'. The feedback shown here is intended to reduce distortion and (in some cases) improve high frequency stability. In many preamplifiers, the tone control circuit is part of the feedback network.

Figure 10

attained with many different combinations of resistance and capacitance; theoretically, the end product will be the same. In fact, selection of these values is critical and has a profound effect on the sonic qualities of the unit.

The first stage of amplification is affected by two inputs; the phono cartridge output and the feedback loop. In a very few circuits, there is a positive feedback component as well. This technique for gaining additional amplification has a distinct and unsatisfactory effect on the resulting sound, and is a practice which should be avoided; in the circuit of the recommended preamplifier, no positive feedback is included. Within the first stage of amplification, the signal from the cartridge is amplified significantly; as stated, that amplification is modified by the feedback loop. High frequencies are not amplified as much as low frequencies, in order to ensure that the overall response of the cartridge-preamplifier combination is flat within the audio spectrum. With some RIAA circuits, low frequencies are dramatically "boosted," and that boost continues down to nearly DC. This is an area in which the unit can develop difficulties. As an example, it is possible for subsonic signals (below 20 Hz) to be "magnified" to a point where they overload the tube or subsequent circuitry, saturating components and preventing proper operation.

In the breakdowns of Figure 10 appears a capacitor, connecting (or coupling) the output of the first stage of amplification with the next stage. That capacitor prevents the high DC plate voltage from appearing on the precisely biased grid of the next tube. The function of any capacitor is to restrict electrical flow as frequency drops; when frequency reaches DC, no flow is possible. Therefore, the grid of the next tube sees only the alternating audio signal from the plate of the first stage. That capacitor must be carefully selected, since it is one of many which (collectively) will help determine the lower frequency limit of the end product. In many commercial preamps, the value of 0.01 microfarads (mfd) is selected. That value is appropriate if low frequency reproduction is limited by potential instability, but in a very stable circuit that capacitor can be increased by a factor of 10! A 0.1 mfd capacitor, then, is an excellent choice. Since there are two channels involved, in this case the perfectionist might match similarly located components in order to ensure that the two channels function exactly the same. It is perfectly satisfactory to use capacitors rated at a specific value "plus or minus 20%," but the two channels should be equipped with capacitors of the same measured value.

As for high frequency reproduction in the first stage of amplification, it is absolutely necessary to ensure that any tendency toward high frequency oscillation is damped out completely. It is equally important to ensure that nothing in the circuit exists which will attenuate (reduce) amplification

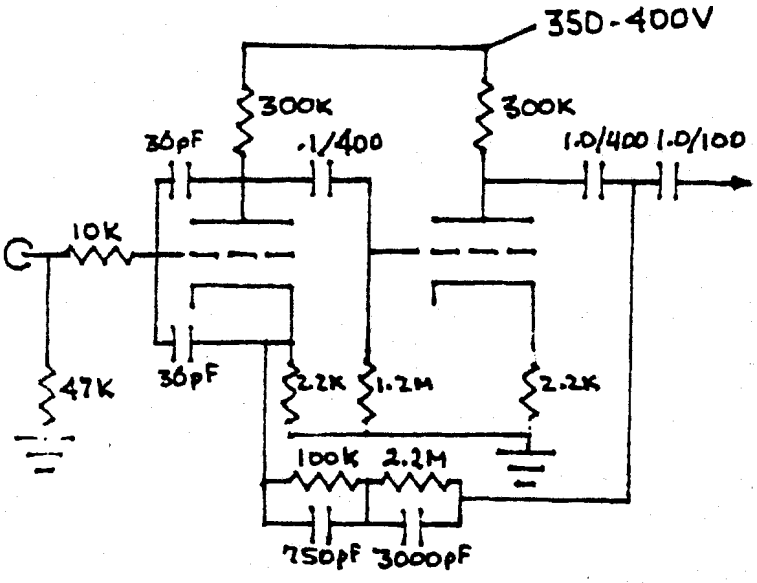

This shows the recommended phono stage circuitry. All resistors are either metal or carbon film, 1%, of the appropriate power rating. All plate and cathode resistors are one-half watt, while the remainder may be one-quarter watt.

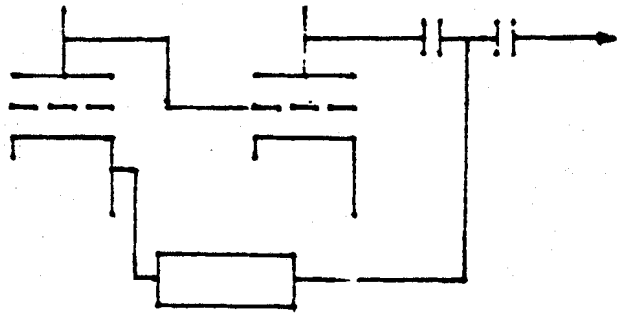

This variation slightly reduces low frequency losses, since no capacitor is used to couple the first two stages. Voltage relationships are critical, of course, but feedback remains the same.

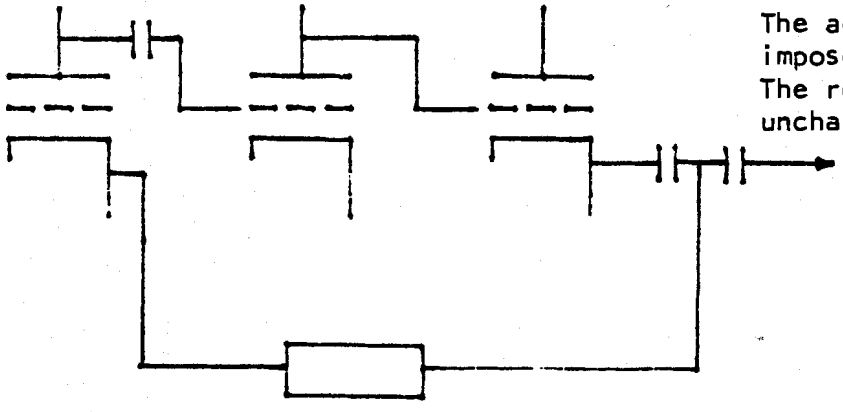

The addition of a cathode followe imposes no significant problems. The remainder of the circuit is unchanged, despite direct couplin

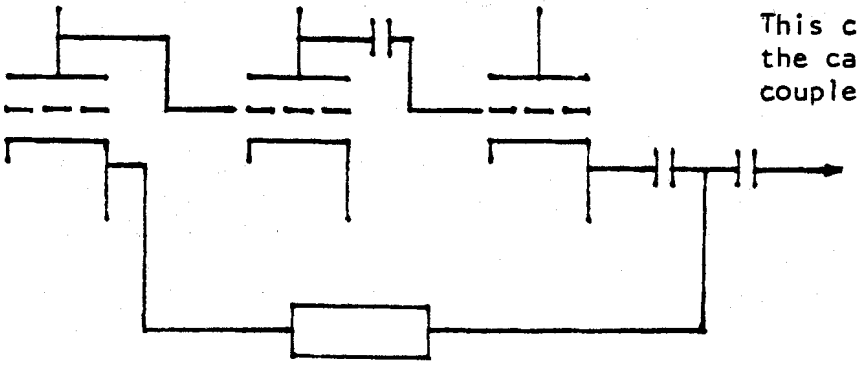

This circuit is less critical, si the cathode follower is capacitiv coupled to the preceding stage.

Figure 11

beyond that reduction set by the RIAA curve. One good technique is the insertion of small capacitors from the grid to both the cathode and plate. Another potential limit to high frequency performance is the capacitance which exists from wire to wire, switch to switch, and electrode (in the tube) to electrode. Careful routing of wiring will help avoid problems in this area, but those wires which carry extremely low voltages are susceptible to hum pickup and should be routed away from electrical fields which might generate noise. Compromise is obviously necessary, since good practice calls for routing hum-susceptible wiring close to the chassis. It is suggested that the builder first attempt to route each wire slightly above the chassis, with several millimeters between it and any other wire. If excessive hum cannot subsequently be eliminated by any other means, bundle the wires, shield them, or route them closer to the chassis.

Assuming, then, that a good clean signal passes the capacitor connecting the plate of the first stage with the grid of the second stage, it is then amplified further. The output of that second stage is then fed either to the selector switch or directly to a cathode follower tube. A cathode follower introduces almost unmeasurable distortion, but it does reduce gain slightly. Impedance mismatches, resulting in poor efficiency at the frequency extremes, are avoided, which makes the cathode follower a good idea <u>when necessary</u>.

Briefly, the phonograph circuit works like this: the signal is connected to the grid of the first tube, amplified at the plate, coupled (through a capacitor, in most cases) to the next stage, amplified further, and then passed on to the selector switch or a cathode follower, with a small portion of the signal "fed back" to the first stage to provide RIAA equalization.

An examination of the phono circuit and the high level circuit will show their similarities; they are nearly identical except for the type of feedback used. The high level circuit uses feedback which reduces distortion and improves frequency response, but does not compensate for any problems outside that circuit. If the reader compares this text with the published schematic of his "favorite" tube preamplifier, there will be several differences immediately obvious. See Figure 11.

Illustrations show no tone controls, scratch filters, loudness switches, or other control functions. Also, they usually show tubes which are coupled with capacitors, while some preamplifiers have "direct coupled" stages. That is, there is no capacitor between the plate of one stage and the grid of the next. This is made possible by very carefully controlling the voltages of each stage, and ensuring that though the plate voltage of the first stage appears on the grid of the second stage, that grid is still kept slightly negative <u>with respect to</u> the cathode, and the plate of the second stage is so positive <u>with respect to</u> the cathode as to attract the electrons emitted by it. See Figure 12.

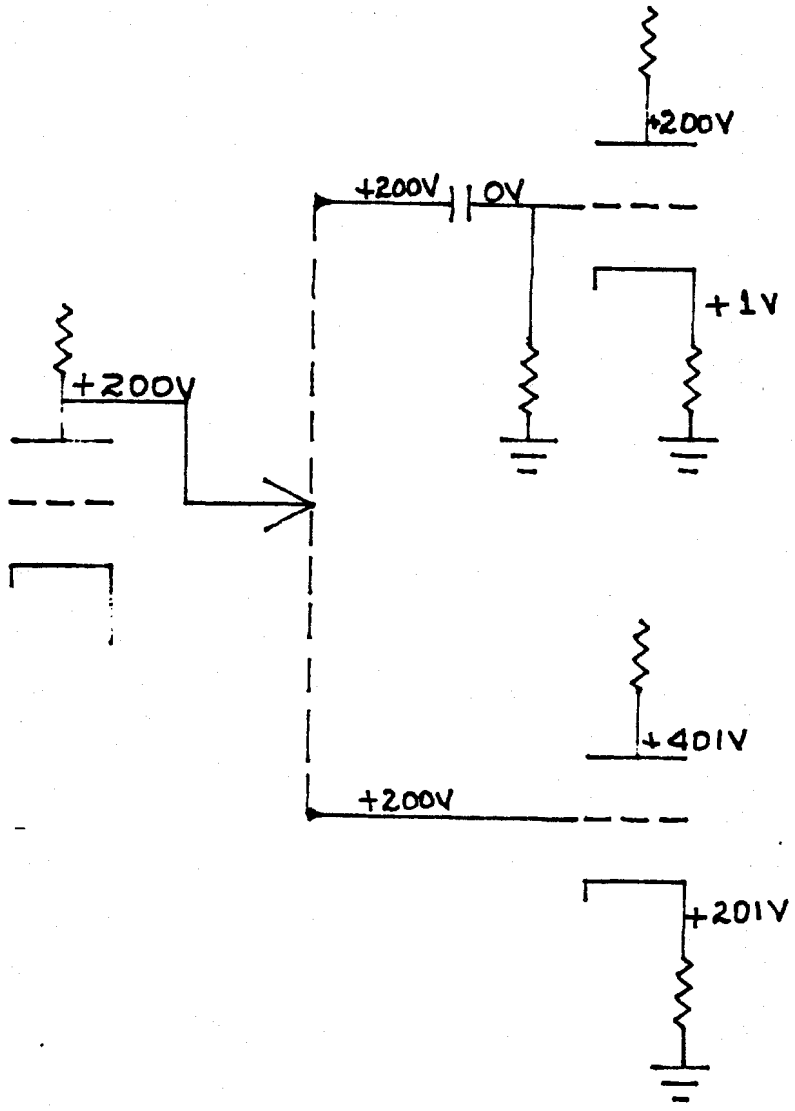

This shows the basic difference between direct coupled and capacitively coupled stages. Note the voltage relationships.... it is mandatory that the grid of each stage be slightly negative with respect to cathode. In a capacitively coupled circuit, this is achieved by placing a resistor in series with the cathode; the voltage drop across the resistor - due to current flow in the tube - causes the cathode itself to be positive with respect to ground. The grid is kept at ground potential through use of a grid leak resistor (since there is no current flow, the grid is effectively grounded). When two stages are direct coupled, the grid of the second stage is at the potential of the preceding plate, and the cathode must be 'brought up' to a bit more than that voltage.

The problem with direct coupling is maintaining the proper voltage relationship between grid and cathode. Even a slight change will affect the performance of the tube. When direct coupling is decided upon, it is recommended that some form of active voltage regulation be used.

The sonic difference between direct and capacitive coupling is minimal, <u>if</u> the capacitor itself is neither too small nor too large. If it is too large, it may act as an inductor, inhibiting the transfer of high frequencies. If it is too small, low frequencies will be attenuated.

Figure 12

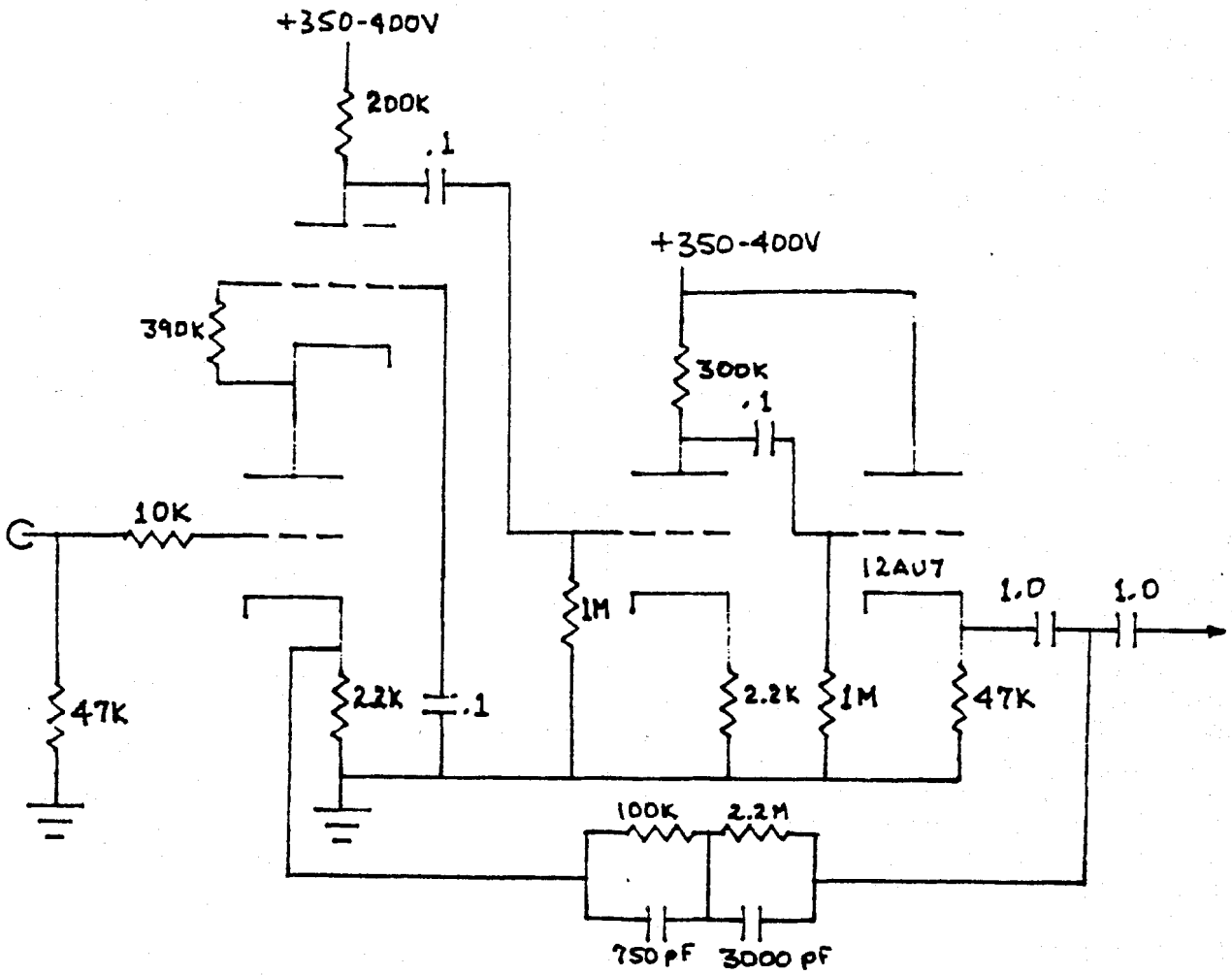

This adaptation of the cascode circuit has been quite successful. The third stage is used to re-establish correct phase, and contributes to gain. The fourth stage is a cathode follower. The standard (recommended) RIAA feedback circuit works very well, but a passive circuit between the third stage and the cathode follower has also been successful; there is sufficient gain. This and other cascode circuits are plagued with impedance problems. It is mandatory that some sort of impedance conversion device be used, such as the cathode follower.

The serious experimenter will want to try feedback to the input grid circuit. Such a feedback network would appropriately begin at the plate of the top tube of the cascode.

The 12AX7 cathode follower, with a 1k cathode resistor, 310V on the plate, and a 470k metal film resistor between the plate of the preceding stage and the coupling capacitor, can also be used.

Figure 13

If the plate of the first tube is kept at 200V, then that same voltage appears at the grid of the next tube. The cathode, then, must be at something like 201 volts and the plate at 200 volts more. If there were to be yet another direct coupled stage, the plate of that next tube would have to be at substantially above 600 volts, which would necessitate an unusual power supply indeed. In practice, no more than two consecutive stages are direct coupled.

There is another, completely different, concept of preamplification which must be considered. Called the Wallman Cascode, it uses two tubes to achieve high gain with extremely low noise. The first tube works in a manner similar to any other circuit, but the plate of that tube is connected to the cathode of the next tube. Because the grid of the second stage is at "ground potential," it operates in what is called "grounded grid" mode. This sort of cascode circuit was developed some time past by H. Wallman, whose name it bears. He originally utilized another tube, but the circuit is perfectly suitable to the 12AX7, once certain adaptions have been incorporated. The signal at the plate of the second tube is 180° out of phase with the original signal, so one additional stage of amplification will "put things right." If one considers each 12AX7 as two tubes (it is a dual triode, of course), then a total of four stages are available in two tubes. The first two stages should be in cascode, the third stage used for phase inversion and further amplification, and the fourth stage as an impedance matching device; a cathode follower. The cascode circuit has the gain of a pentode, but without partition noise or higher order harmonic distortion.

The characteristics of the cascode circuit make it very suitable for amplification of audio signals form a magnetic phonograph cartridge. Noise is extremely low, dynamic range is exceptional, and distortion measurements indicate excellent overall performance. Figure 13 illustrates oneversion of the cascode preamplifier; the more sophisticated builder might elect to incorporate this in his Dynaco PAS or other compatible chassis. Voltage and current requirements are about the same as those of the more conventional circuit, so the builder can defer the decision until the power supply is finished. Further, installation of one circuit in the chassis in no way precludes conversion to the alternative at a later date.

HUMMMMMMMM AND HISSSSSSSS

Silence is golden, saith the elders and the advertising moguls. The audiophiles agree that one of the most disturbing problems associated with their hobby is unwanted noise.

No semiconductor or tube operates without injecting a finite quantity of noise into the end product; the object of good design is reduction of hum and hiss to (hopefully) a subliminal level.

Burwen, Kenwood, Phase Linear and Panasonic all argue that hiss is more annoying than hum, that hiss is most annoying during quiet passages, and that it is nearly undetectable when "masked" by a comparatively loud signal. These firms have produced devices which reduce gain (overall loudness) whenever the relationship between signal strength and noise is such as to make noise detectable. As a result, whenever the signal "comes up," the noise rises behind it, creating a breathing or rushing sensation. To many, this effect is far more annoying than constant hiss. When hiss is steady, the sensory system learns to ignore it. When it is constantly rising and falling, even "behind" the signal, it can detract considerably from enjoyment. The psychoacoustic effect of these devices can be extraordinary when the signal source has a low noise level. Under those circumstances, the rise and fall of the noise is virtually undetectable, and the utter silence at times adds an extraordinary effect to the program. On the other hand, these devices are of little value when the program material is (for instance) a piano solo recorded 20 years ago. Despite advertising claims, noise reduction cannot convert an old recording into a state of the art masterpiece. It must be kept in mind, however, that dynamic noise reduction can be quite spectacular when used with records and tapes of excellent quality.

In an audio system, hiss is produced from several sources. Resistor noise can be a significant factor, particularly when carbon composition resistors are used to carry considerable current. Replacement with film resistors in such applications will always reduce hiss. Both tubes and transistors contribute hiss to the signal. In both cases, the problem can be reduced by carefully selecting each device in the signal chain. Tubes are inserted in sockets and transistors are usually soldered into the circuit; also, there are normally many more transistors than tubes in any given device. Construction of a tube device with low noise characteristics is considerably easier than when transistors are involved, even though the lowest possible noise level is attainable only with solid state devices.

The process of reducing hiss in tube components consists of replacing carbon composition resistors with film resistors, and careful (time consuming) selection of tubes, particularly in the first stages. Very occasionally, a bit of hiss-like noise will enter a circuit from a potentiometer or switch; cleaning or replacement will eliminate that problem.

Hum is another problem entirely. Consumer noise reduction units do not normally deal with hum, as the source of such spurious signal content is usually a design or component fault. Hum is an insidious detriment to the enjoyment of a system, and can cause an ulcer when the search for its sources becomes an obsession. In some system, the presence of 60 Hz hum can "use up" a considerable portion of amplifier energy, even when the speakers are unable to transfer that energy effectively into

the listening room. Further, the presence of hum in the audio signal can produce beat frequency problems and/or intermodulation which subtly detracts from reproduction.

The search for hum must begin with isolation of the component in which it originates. This means that one by one the components must be removed from the audio chain until the hum disappears. The sudden disappearance of hum when the phonograph cartridge is unplugged from the preamplifier may lead to the conclusion that the cartridge is at fault, when the problem actually involves the configuration of the cables and ground wires rather than any difficulty with the cartridge itself. A "ground loop" is a condition which exists when the ground path acts as a resistor, across which voltage fluctuations take place. When any resistance at all exists in the ground circuit, the induced current flow will produce a slight voltage difference which can be detected by the amplifier circuitry, introducing hum. In power supplies, for instance, it is recommended that all appropriate circuit elements be grounded at the same point. Single point grounding in the power supply is necessary since there is a great deal of current flow through the ground path. A distance of a few inches, even through a steel chassis, will have a very slight resistance which will cause a corresponding voltage fluctuation across that distance. The result can be hum.

Hum can also be introduced by faulty or insufficent power supply filtering. Detection of the specific source of hum, within a component, can be aided by "looking at it" on an oscilloscope. A full wave rectifier operates at 120 Hz; the AC input from house wiring is at 60 Hz (in the United States). This distinction will permit discrimination between B+ supply hum and that induced by stray fields around power cords and the like, or from the filament supply.

If the filter section in the B+ circuit is properly designed, ripple should be reduced to a negligible level. In fact, in the power supply recommended by this text for preamplifiers, ripple is undetectable with an oscilloscope which produces a one-half inch deflection with an input of one millivolt (one one-thousandth of a volt)! If hum is present in the B+ supply, look for a shorted choke, a bad filter capacitor, or an excessive current drain in the circuit. This latter factor is often overlooked; when current drain is excessive, the filter capacitors are not as effective. A leak to ground or a faulty tube can cause hum.

The filament supply is another potential source of hum. In power amplifiers, pure AC is usually used to heat the filaments. Because of the relatively high signal level within the power amplifier, this is seldom a problem. In preamplifiers, however, one must either use direct current (DC) on the filaments or some means of balancing the filament supply to reduce voltage differences. The latter technique usually consists of a

potentiometer wired across the filament circuit with the wiper running to ground. A DC filament supply is far better. In such a circuit, the larger the capacitors the less pulsation will exist in the DC filament voltage. Also, if the transformer will sustain such a load, it may be a good idea to use a voltage dropping choke or resistor to improve regulation. The end product must be relatively smooth DC at a voltage appropriate to the tube. That voltage is important, as most experts agree that filament voltage must be kept within ten percent of the recommended value if tube performance and life expectancy are to be optimized. Optimum filament voltage for most tubes is indicated by the first digit(s) of the tube identification number. The 12AX7, for instance, requires a filament supply with 12 volts. Of course, variations in the filament wiring circuit (series or parallel arrangements) will change the required voltage at the source and the optimum hum-bucking technique.

By far, the best source of filament power is an automobile battery. No other source is as stable as a freshly charged wet cell. Though bulky and inconvenient, and requiring a trickle charger when not in use, the automobile battery is the optimum means of powering the filaments in such hum-sensitive devices as the moving coil subpreamp.

RIAA EQUALIZATION VARIATIONS

Most engineers attribute the first of the feedback RIAA circuits to Mr. Gordon Mercer; he developed the concept while working for Fairchild in the early 1950s, it is said. Though innovative at the time, the feedback equalization circuit may have outgrown its usefulness. Remember, negative feedback serves only to cut, or attenuate, response. The magnetic cartridge acts as a generator, with an output voltage dependent only upon velocity of the stylus. That velocity is directly proportional to audio frequency, which means that voltage output will be lowest at the lowest audio frequency, and will increase as frequency increases. Since negative feedback serves only to cut, the negative feedback circuit must be designed to cut precisely in accordance with the change in cartridge output, in order to produce a reasonably linear output. The designer has his choice of many possible feedback networks; most stick to industry-standard values for the capacitors and resistors involved. Regardless of the configuration, a great deal of negative feedback is applied to the high end, and almost none to the bass octaves. This means that the bass will pass through the preamplifier with little or no distortion-reducing feedback, while the treble region will be attenuated by great amounts of feedback. If any feedback is applied to the low end, in order to reduce distortion, then still more feedback must be applied to the top end in order to keep overall response "flat." Also, should this latter course be chosen, the problem of gain arises;

it may become necessary to use additional stages of amplification in order to ensure adequate output.

There is no perfect solution to this problem; every proposal is a compromise if one begins with the assumption that negative feedback is necessary. Whether the unit was designed in 1950 or 1976, if it uses negative feedback for RIAA equalization, then insufficient feedback is being applied to the bass and excessive feedback is being applied to the treble.

Some circuits have been designed to avoid the use of negative feedback for equalization. One designer proposed positive feedback in the bass region, in order to get the low end voltage up to the amplitude of the treble. Though the product reached the market, it was not successful because of the excessive distortion below 500 Hz and the instability which resulted when a subsonic signal entered the circuit. Another approach involved the use of a "push through" equalization circuit, a passive network between the plate of the second stage and the grid of the next. A single resistor provided feedback within the first two stages in order to keep distortion low. This system worked extremely well, though no current product employs it.

A somewhat simpler approach consists of wiring a network between the first and second stages and depending upon local degeneration in the cathode circuits for distortion reduction.

The latter circuit is easy to install:

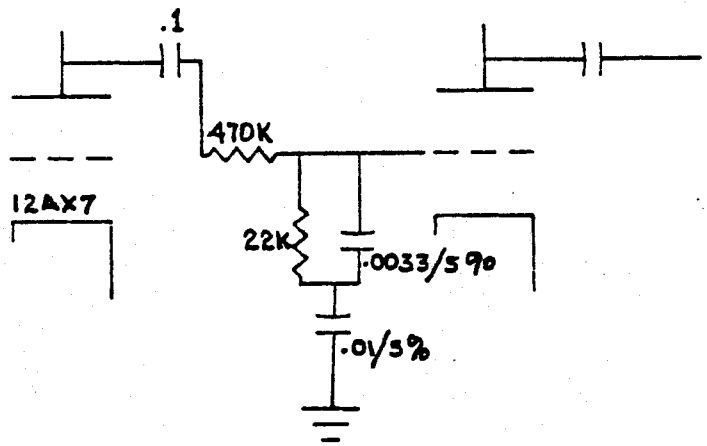

Place the 470k resistor between the coupling capacitor and the grid leak resistor of the second stage. Then wire a 0.0033 mfd capacitor and a 22k resistor in parallel from the grid of the second stage to another capacitor (0.01 mfd), which is then wired to the ground. Though not as linear as the more complex circuits, it has a quite gratifying "airiness" about it and a solid, extremely well defined low end. These advantages, to

some, more than compensate for the irregularities in frequency response.

Another unusual approach to the equalization problem was marketed by Arkay about 20 years ago. Thanks to the laws of physics, it still works. It consists of a single resistor and capacitor in series between the plates of the first two tubes. Connect a 47k resistor to the plate of the first tube and a 2000 pF capacitor to the plate of the second tube; join them and eliminate all other forms of equalization. That is it! Though Arkay used this technique on a grounded cathode unit, it is effective in other circuits as well.

Generally, then, it is not necessary to use the conventional RIAA equalization feedback loop; other techniques are available, and each has its advantage. Experimentation is the key, and the investment in time may be repaid with interest.

Other variations in RIAA equalization have been tried, with results from disappointing to spectacular. Those in the latter category include an extremely precise network, as shown below:

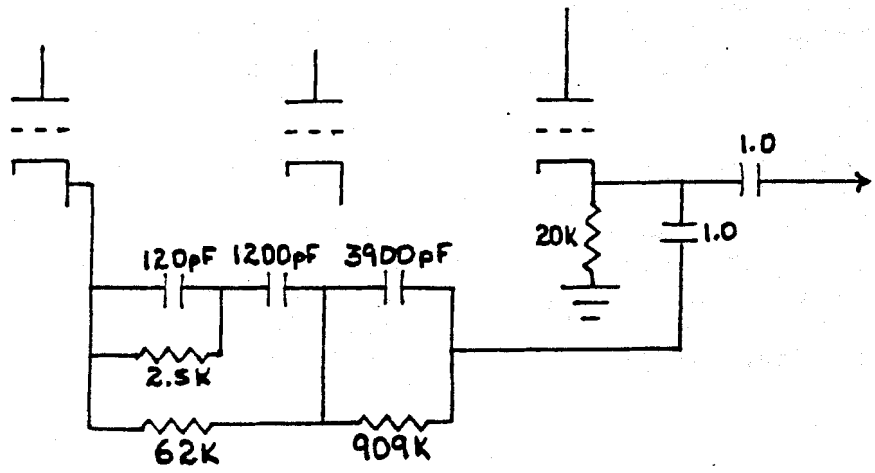

One advantage to this method is an extremely well defined low end. Midrange and treble are excellent, also, but do not surpass results obtained with other circuits.

Another proposal, for a passive circuit between the two gain stages, is intended for the technically qualified builder:

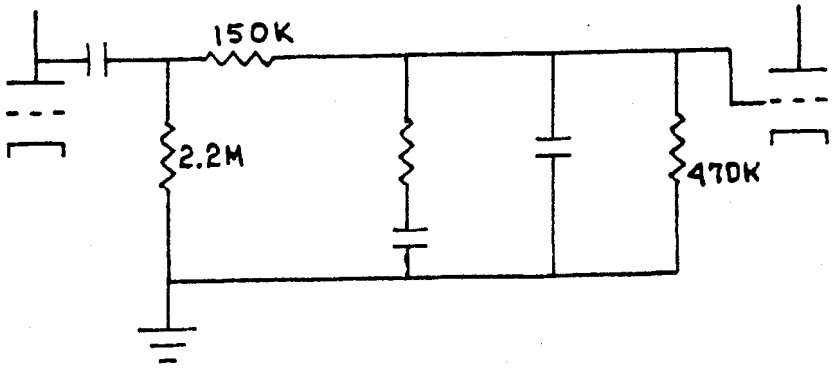

Component values must be computed; the driving factors are the impedances present at either end of the circuit. If this circuit is used, keep conventional feedback to a minimum. Use at least 100k and no capacitance; also, remove the small capacitors from grid to cathode and plate on the first stage, unless high frequency instability appears.

OUTPUT IMPEDANCE

The reason a preamplifier sounds good with one system and poor with another is usually impedance mismatch. A 12AX7 circuit (without cathode follower) is good for something like 50,000 ohms, which means that anything lower than that will cause a mismatch. This is most easily understood by considering the preamplifier as a generator. Like all generators, it has a specific amount of internal impedance, or resistance. The load placed on the generator will have a substantial effect on performance; the higher the load (less resistance), the lower the "rpm." As the lead is decreased (more resistance) the "rpm" will rise. Obviously, in designing any element of an audio system, it is necessary to determine the conditions under which it must operate. There must be an optimum region of operation. When impedance is considered, that optimum region begins above a specific load placed on the preamplifier.

If 50k is the minimum impedance into which the recommended circuitry works properly, then it is necessary to know the input impedance of the power amplifier, or electronic crossover, to be used, and then to compute the total impedance of that unit and the load resistor within the preamplifier. Remember, the sum of the reciprocals of the two values equals the reciprocal of the total resistance, in a parallel circuit. For vacuum tube amplifiers, a 62k load resistor is usually correct.

If a solid state amplifier is to be used, replace that resistor with 500k or even 750k. See Figure 14.

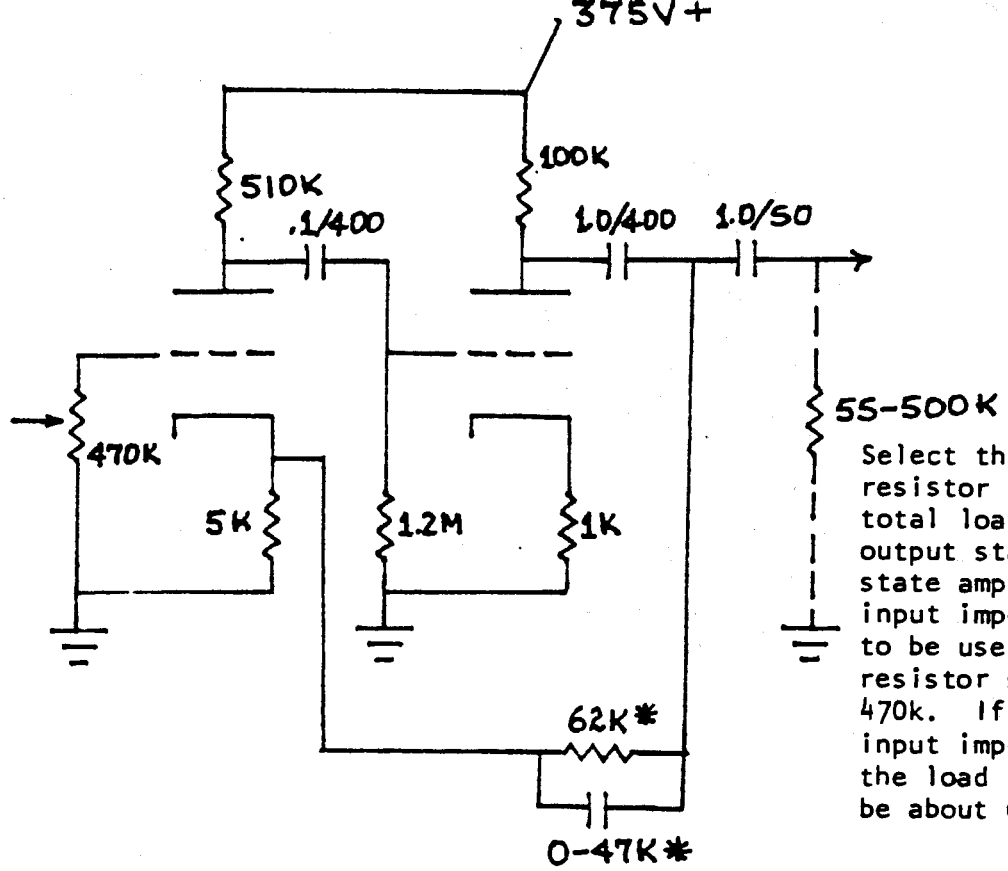

Select the output load resistor to provide a total load of 50k on the output stage. If a solid state amplifier, with an input impedance of 60k, is to be used, the load resistor should be about 470k. If the power amp input impedance is 470k, the load resistor should be about 60k.

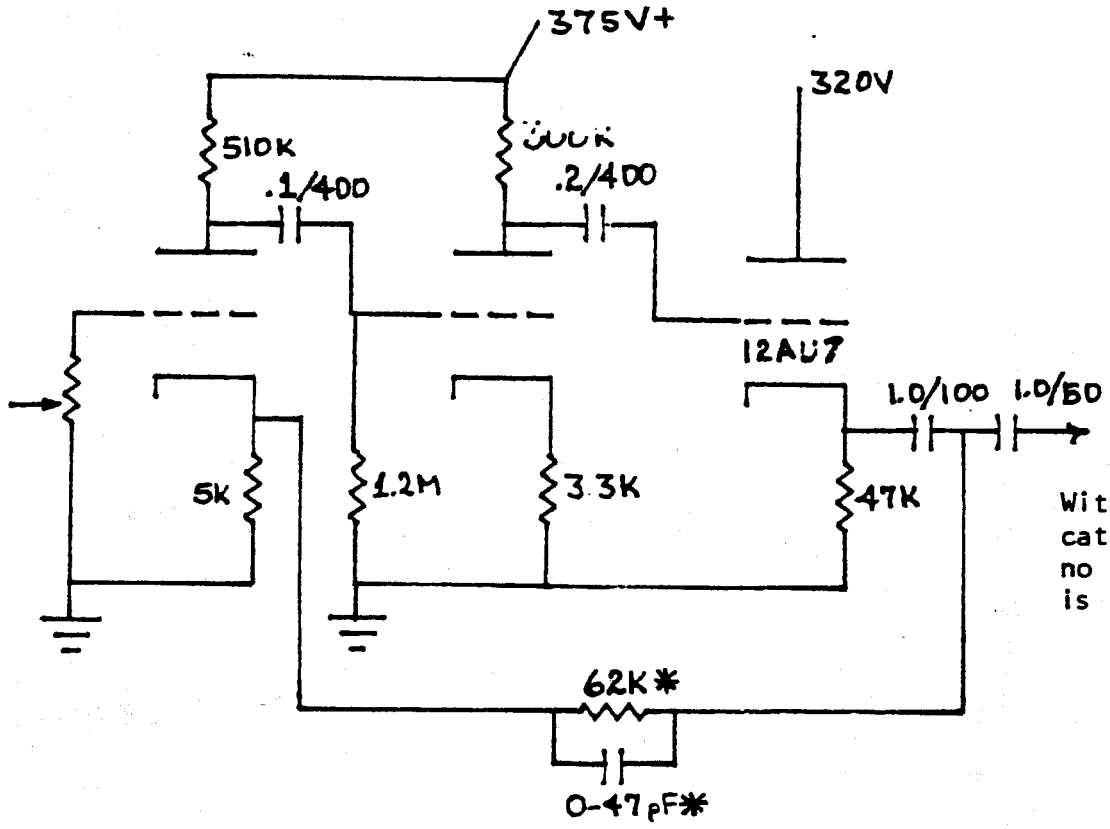

With this 12AU7 cathode follower, no load resistor is required.

* A general rule is minimize feedback, and eliminate capacitive feedback where possible. The above circuits have worked very well with a 180k resistor in the feedback loop!

OUTPUT CIRCUITS: HIGH LEVEL STAGES

Figure 14

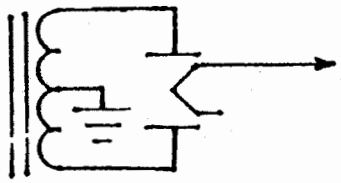

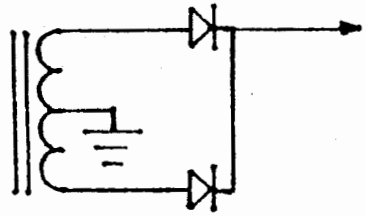

Every circuit will begin with a power transformer and rectifier, of some sort.

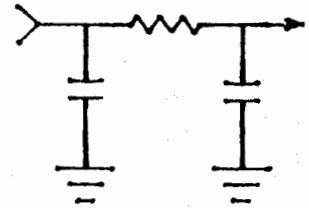

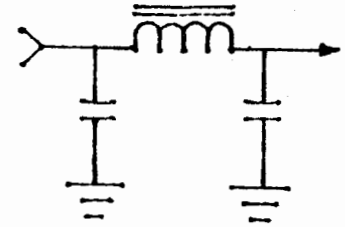

The next item in a power supply is the filter circuit. Either a resistor or choke may be used, depending upon required output voltage.

The next item in the power supply chain is the active regulator, if one is to be used. The examples show shunt and series, tube and solid state options.

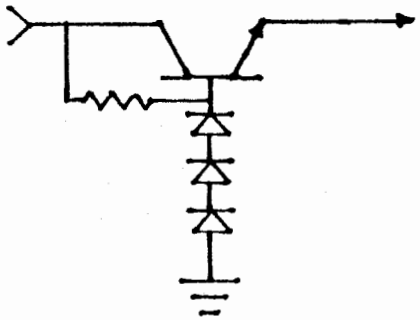

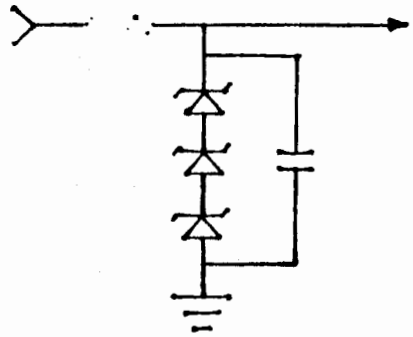

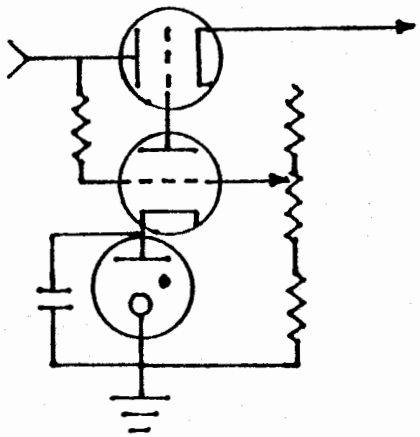

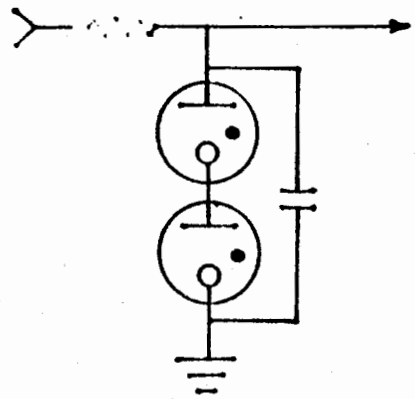

Finally, all circuits end with some sort of decoupler, which prevents interaction between various elements of the component. The most exotic type of power supply will include active regulation in the decoupling circuit.

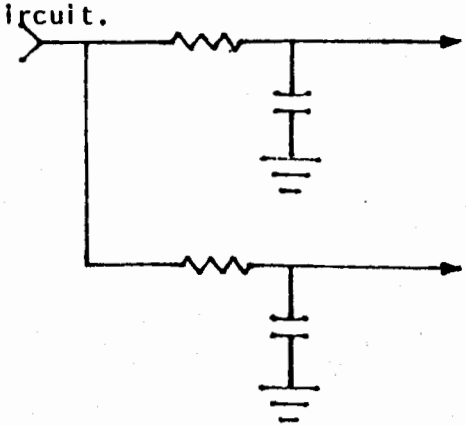

chapter seven

preamp power supplies

To support operation of our optimized preamplifier circuit, it is mandatory that the power supply be absolutely stable, and capable of providing the necessary voltages and current flow. The power supply shown in Figure 15 represents no specific unit, but is typical of those used between 1935 and 1965, and is in use today in some products. The voltage which appears at the secondary winding of the transformer (the high voltage portion) varies only when there is a change in line voltage. Voltage drops occur wherever there is a series resistance in that circuit, and the voltage which finally gets to the tube is lowered substantially. Since the 12AX7 operates best at a voltage higher than that normally seen in most preamp circuits, it is necessary to both increase the voltage available and improve stability. Unfortunately, these two factors seem to operate in an inverse relationship; today's engineers insist that as voltage is increased, stability is reduced. Several techniques exist for enhancing stability; they must be applied in a way which will permit the required increase in voltage.

One of the more modern means of enhancing stability of the power supply is regulation. This method is frequently encountered in today's audio equipment, both tube and solid state. Regulation can be in the form of a shunt or a series device, and, as is the case with most circuits, can be accomplished with either tubes or solid state components. Since the signal does

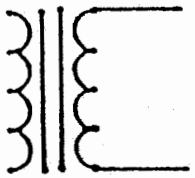

NO CENTER TAP

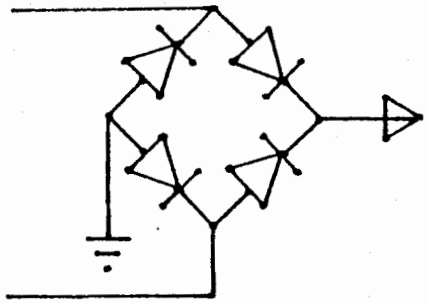

FULL WAVE BRIDGE

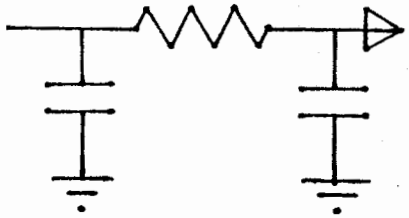

HALF WAVE SI DIODE

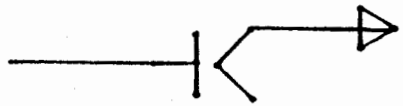

HALF WAVE TUBE DIODE

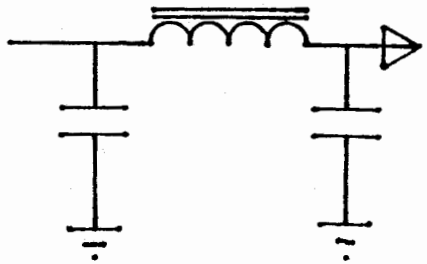

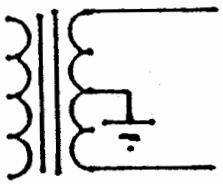

CENTER TAPPED

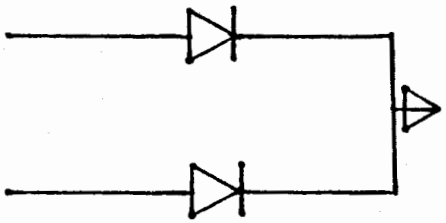

FULL WAVE RECTIFIER, SI

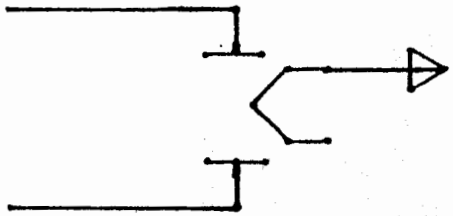

FULL WAVE RECTIFIER, TUBE DIODES

Power transformer

Rectifier circuit, based upon type of power transformer

Filter and decoupling circuits remain about the same regardless of transformer or rectifier type, however, half wave rectifiers require more filtration.

not go through the regulator, and solid state takes far less space than tube regulation, we will consider the zener diode shunt regulator and the emitter follower series regulator as candidates for stabilizing the B+ circuit. Consider an electronic antique, seldom seen today: the choke.

A choke is simply a coil of wire on an iron form. As electricity passes through it, any changes in that electricity are opposed. Alternating current is greatly attenuated by a choke, as is any variation in direct current. The choke, then, passes DC and restricts the flow of AC. This is in direct contrast to a capacitor, which passes AC and prevents the flow of DC. The characteristics of these two devices can contribute to a power supply which is far more stable than can be achieved by regulation alone, and which is considerably easier to build. The replacement of resistors with chokes will both improve stability and increase available voltage.

Figure 16 illustrates several elements to be considered when designing or modifying a preamplifier power supply. The first of the transformer examples shows a secondary winding which is not center tapped; it requires either a full wave bridge rectifier or a half-wave rectifier, depending upon the required voltage. In most cases, the bridge will provide the required output voltage, which--in all recommendations made in this text--is at least 400V at the rectifier output. One major advantage of the bridge circuit is reduced ripple; the smoothing circuit which follows has less work to do. The criteria, then, is voltage; if the circuit will produce at least 400V, use the bridge and save effort on the smoothing circuit.

The lower example of a power transformer secondary shows a center tap, which means that a simpler full-wave rectifier can be used.

The comparison between thermionic (tube) rectifiers and silicon diodes should be very clear. The solid state diodes take far less space, generate almost no heat, can provide a bit more voltage, and have no warm-up period. That last point may pose a problem, since the instantaneous operation of the solid-state rectifier will send maximum voltage throughout the circuit to each tube, where it will appear at the plate until the tube warms up (about 11 seconds for a 12AX7) and begins conducting. The 12AX7 is rated at 330V maximum, which means that a temporary overvoltage might slightly damage the tube. The damage would probably not cause tube failure, but may slightly increase noise every time the unit is turned on. A good L-C (choke/capacitor) smoothing and decoupling circuit will work well with thermionic (tube) rectification, whether half or full-wave, and will provide excellent regulation.

The smoothing circuit can be of two general types; choke input or capacitive input. The terms apply to the first component met by the incoming pulsating DC voltage from the rectifier.

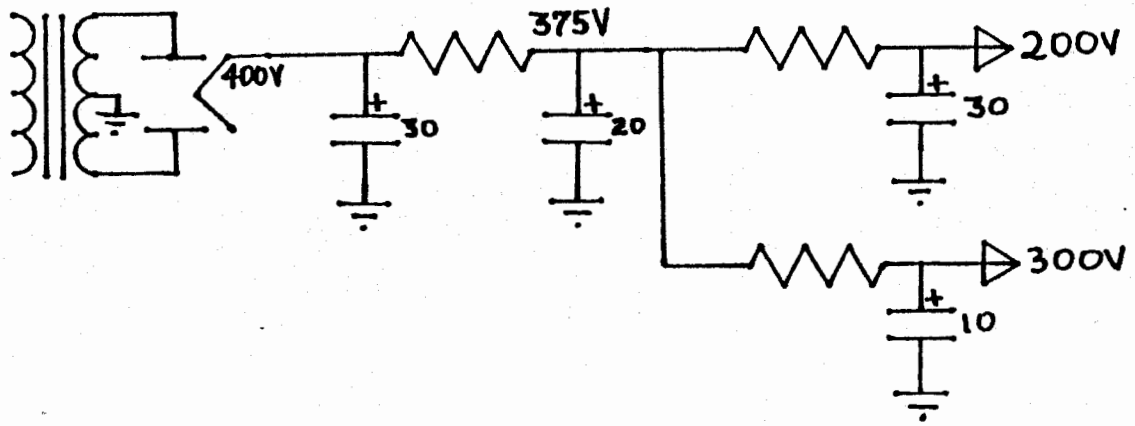

OPTION A

This is a complete power supply, typical of those used in many modern preamplifiers. The voltage losses are due to drops across the resistors, a requirement due to the use of relatively small filter capacitors. The smaller the resistance, the less the loss, but regulation (stability) suffers.

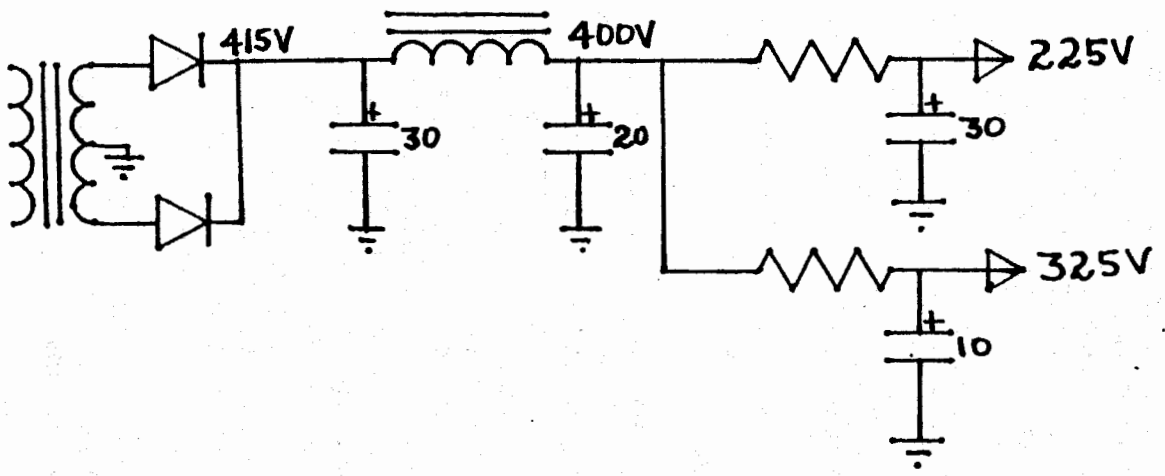

OPTION B

This circuit has been improved by substituting a choke for the first resistor. Though the choke improves stability, it has less DC resistance than the resistor it replaces, so output voltage is increased.

Figure 17a

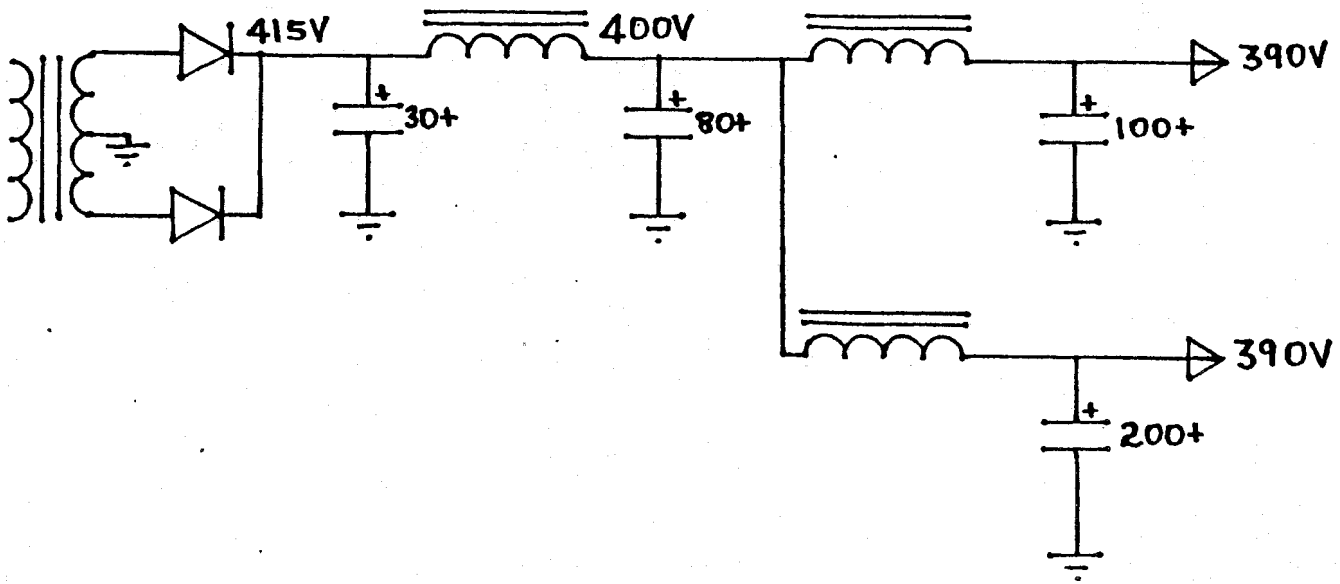

OPTION C

This circuit has been optimized through the use of chokes throughout, resulting in an increase in both stability and output voltage. The larger capacitors also add to stability and (slightly) output voltage.

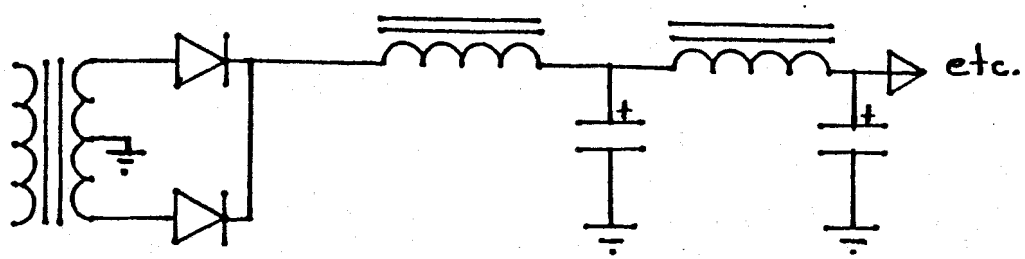

OPTION D

This 'choke input' circuit is used in the rare case where output voltage is too high, or when the last increment of stability is necessary. A choke input filter reduces output voltage by as much as 30%, but provides outstanding regulation.

Though solid state rectification is shown on these sketches, tubes can be used also, with no significant difference in the result.

Figure 17b

The choke input filter provides a small improvement in regulation, but at the expense of 30% of the final output voltage.

The options in Figure 17 show an increasing improvement in both stability and output voltage. Options B and C replace the rectifier tube with two silicon diodes, which may be necessary to gain necessary voltage and chassis space. The next option suggests the replacement of the first resistor in the power supply circuit with a choke. That choke, though it will have only a fraction of the resistance of the resistor it replace, will enhance stability considerably because it resists fluctuations. On either side of the choke is a capacitor connected to ground. Remember that a capacitor passes AC and stops the flow of DC. These three components make up a "smoothing circuit."

In this application, the fluctuations in voltage (AC) are passed to ground while the B+ (DC) passes on to the next component. In Option B, the other resistors are left in the circuit, which greatly reduces the voltage available but keeps it above the original level. Option C is an outstanding power supply which, properly built, will be at least as stable as most regulated circuits in use today. From a source of 415 V, this circuit loses only 25V, making 390V available at the plate load resistors at each stage.

The substitution of chokes for resistors has eliminated the necessity of finding and installing a new transformer capable of delivering the required voltage to a conventional filter and decoupling circuit. The term "decoupling" needs explanation: remember that the tubes involved in the amplification process have the signal appearing on their plates. If that alternating signal finds its way through the power supply to a preceding stage of amplification, it forms a loop which can cause troublesome instability, called "motorboating" because of the sound it makes. To reduce any tendency toward motorboating, or low frequency instability, decoupling capacitors are used; they are shown as the extremely large capacitors after the last choke, on each leg of the power supply in Option C.

These high values have been chosen to do two things; prevent feedback of the signal through the power supply (motorboating) and ensure that the B+ available to each tube remains absolutely constant. The power supply shown as Option C can be improved, of course, as few things are perfect. Improvement, however, would be virtually inaudible. Option C is the author's recommendation for nearly any proposed preamplifier circuit. Inherent regulation, thanks to the chokes and large capacitors, virtually eliminates the requirement for an active voltage regulation circuit.

That circuit guarantees excellent decoupling of the high and low level amplification stages, with little chance of any interaction. Further, the available voltage permits operation of

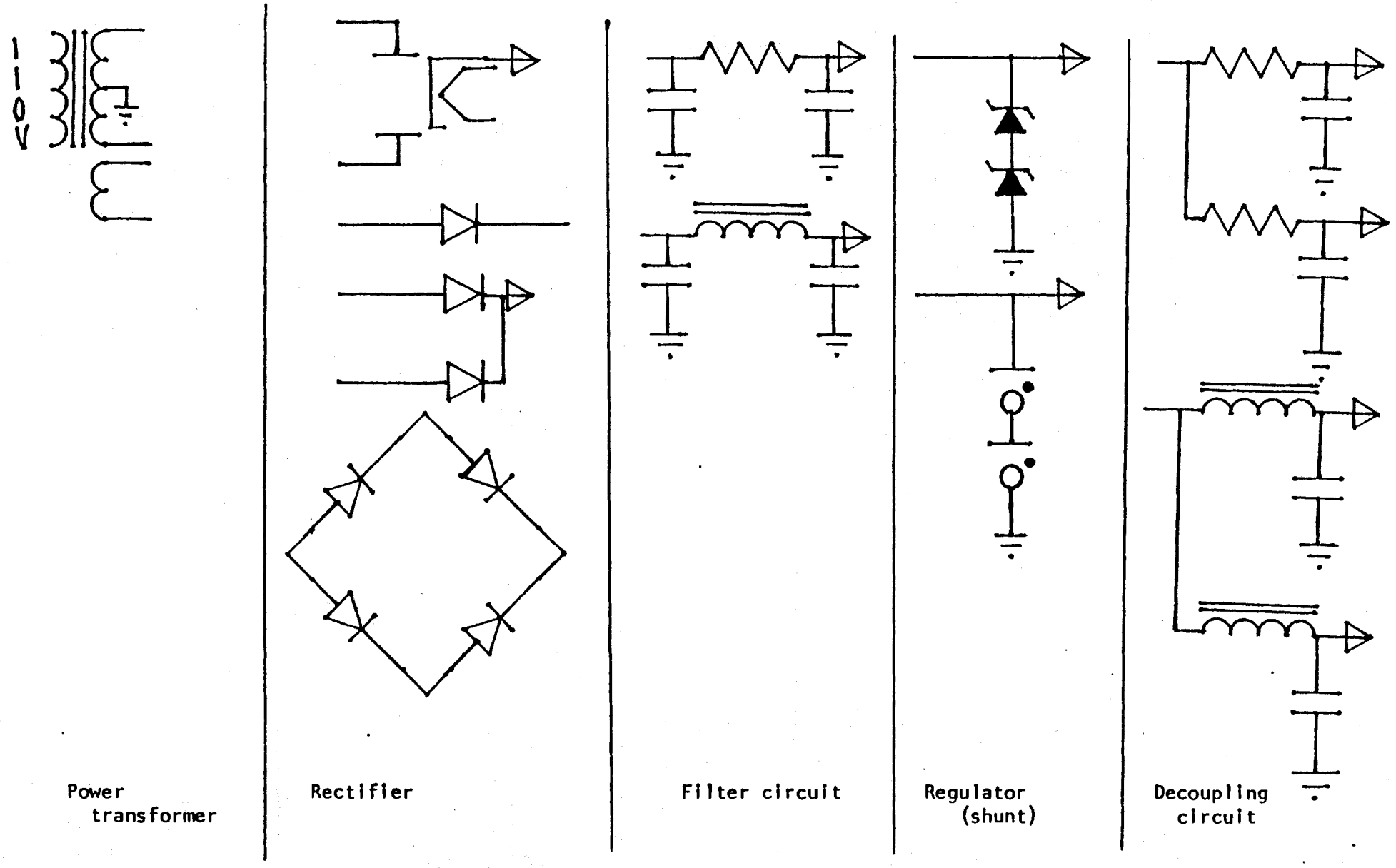

A myriad of variations are possible, of course, including the several types of power transformers, the use of vacuum tube or solid state rectification, multiple filter sections, shunt or series regulation, etc. etc. Generally, though, the sequence and options shown above reflect the circuitry most often seen in preamplifiers. NO SIGNIFICANT DIFFERENCE appears in power supplies for power amplifiers, except that most such units tap the B+ for the output tubes at the filter section, with no decoupling circuit involved. The B+ for the voltage amplifier and phase inverter stages, however, is nearly always decoupled from the remainder of the circuit.

Figure 18

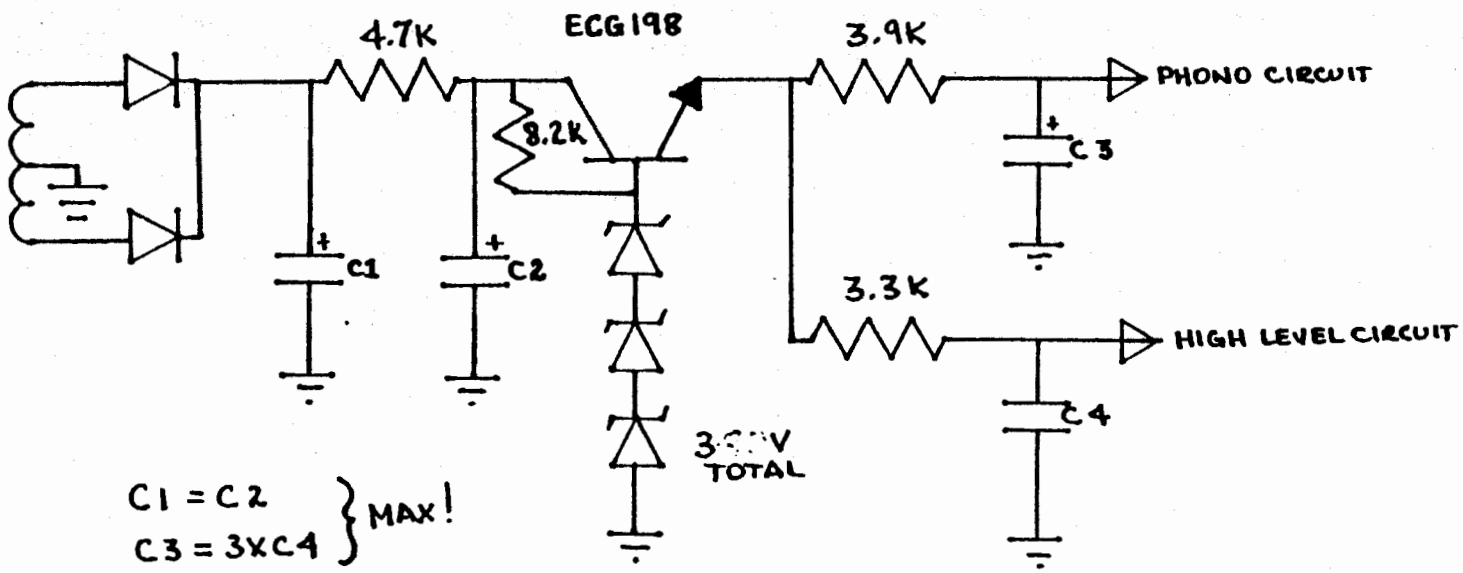

Any zener diode, or string of zeners, should be shunted by a capacitor (film type, not an electrolytic) in order to avoid the appearance of voltage transients in the output. Electrolytics often act like inductors, due to the huge spiral of aluminum inside. In such cases, sharp transients are not shunted to ground, and a .1 mfd capacitor should be used.

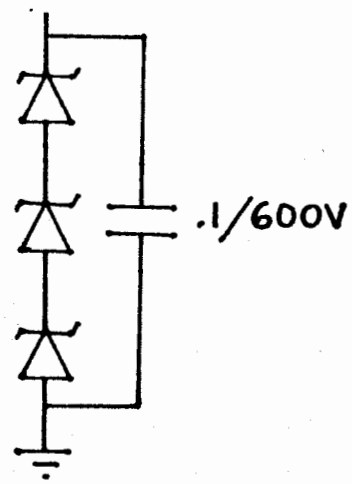

This emitter follower solid state active regulation circuit is adequate for all preamplifiers and, with careful selection of components, for power amplifiers as well.

Active regulation takes less space and costs less than chokes; if both types of circuits are well designed, regulation is about the same. The active regulation circuit has one significant advantage; when variations occur in the AC power source, the active circuit can compensate for them. Slow variations in source voltage will not be filtered out by choke circuits.

Figure 19a

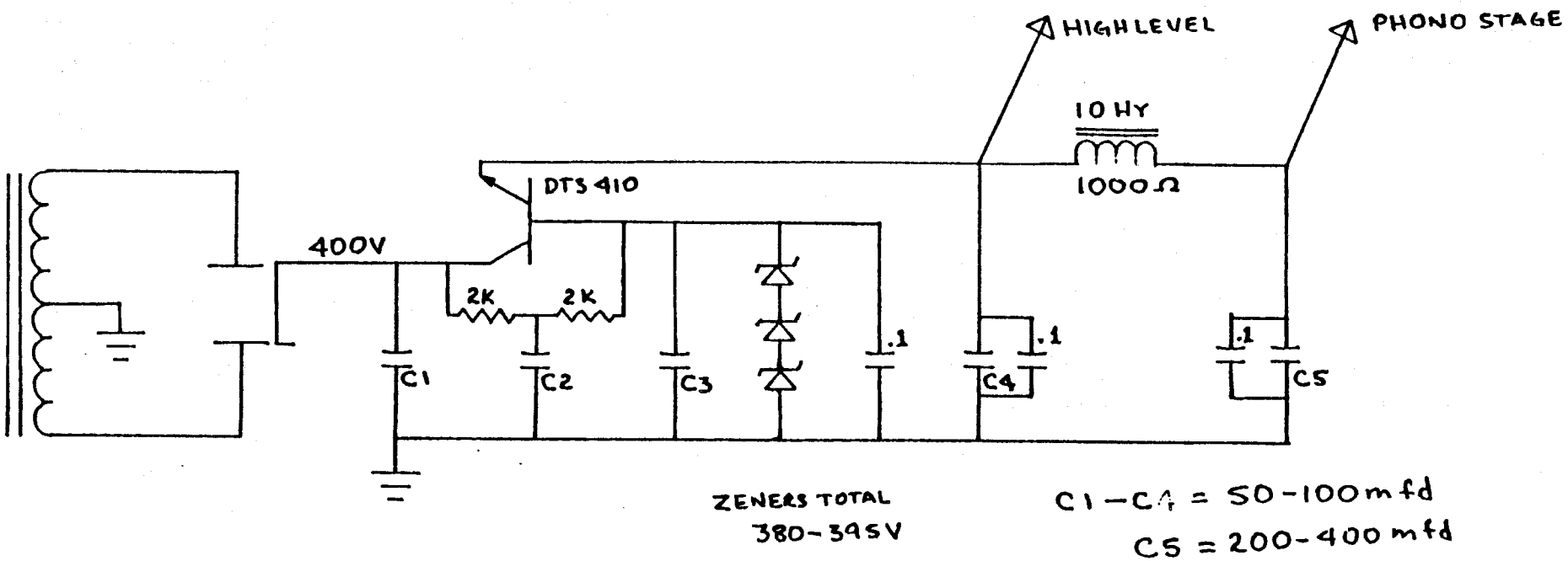

This well regulated circuit is particularly suited to the PAS, Scott, and Eico preamplifiers. Performance can be further improved with the use of a pair of chokes in the decoupling circuit. Note that the zener string and the decoupling capacitors are shunted by a small capacitor, in order to avoid transients in the power supply.

Figure 19b

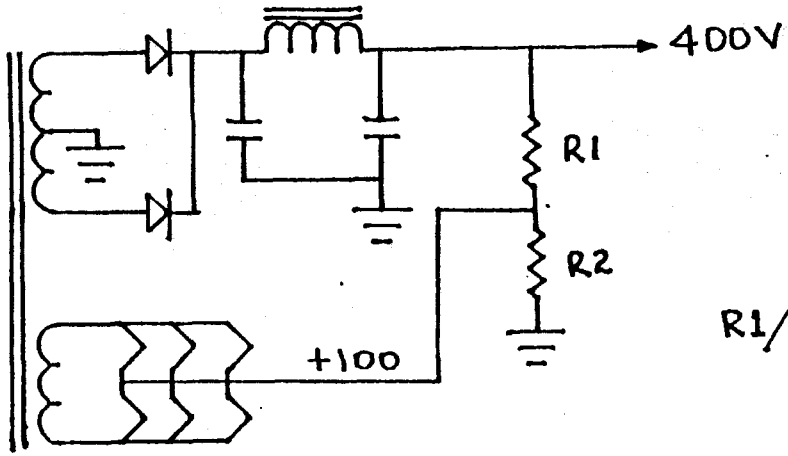

This shows a voltage divider in the B+ supply, intended to provide a source of high voltage to the filament circuit. Properly designed, current drain will be almost unmeasurable. In the example, for instance, R_1=600k and R_2=200k. Current flow equals voltage over resistance, or less than one one-thousandth of an ampere.

$$R1/R2 = 3/1 \quad (600K/200K)$$

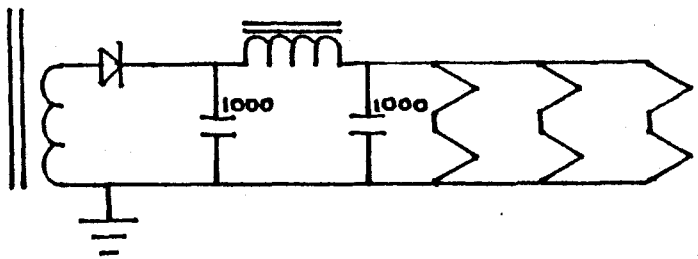

If the power supply voltage is substantially more than that required by the filaments of the tubes chosen, a choke can be used to smooth out the filament supply voltage, thus reducing hum. Note the similarity between the filter section in this sketch and that shown in others.... in this case, much larger capacitors can be used due to the lower voltages involved.

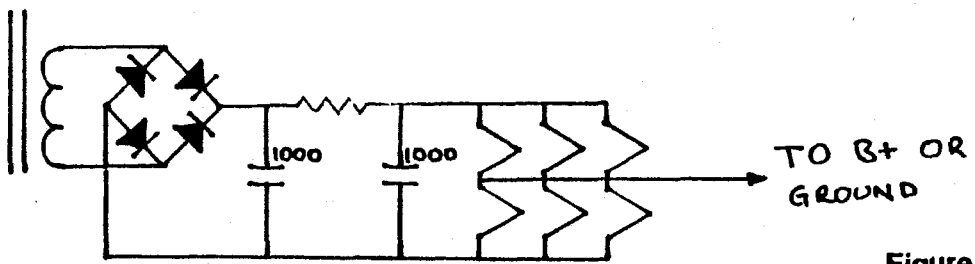

Figure 20

This circuit has been used in some rather sophisticated power supplies. It provides excellent regulation and very low hum. No modification is necessary, except to increase the size of the capacitors used.

the 12AX7 in its most satisfactory state. Though the chokes and large capacitors take a great deal of space compared to the original circuit, the space (in most units) is available once the tone controls are removed.

Another advantage exists; the power supply, though driven by the original power transformer, is so massive that it acts as a reservoir of energy upon which the remainder of the preamplifier can draw without a "ripple." That is, the total capacity of the power supply is so great that no normal signal can cause any fluctuation whatever in the circuit voltages. This will definitely improve transient response, low frequency performance and "definition."

Option D shows on additional choke, which can be added to improve stability (regulation) even more. The 30% voltage drop may be useful in those rare cases where transformer output is too high.

Figure 18 reviews power supply elements.

Many of today's preamplifiers, solid state and thermionic, employ active voltage regulation in the power supply in order to ensure stability and reduce possible interaction between stages. Regulation is not a simple process, but is relatively inexpensive. Figures 19 and 20 show several options.

Zener diodes and a transistor do not cost much when compared to the price of chokes and large capacitors. Another factor contributing to the tendency toward voltage regulators is the fact that chokes and capacitors take a lot of room, weigh a lot, and can produce inductive fields which have a potential for hum generation. The regulator circuit itself can cause such problems, but the likelihood is reduced. Use of shielded chokes, properly placed, usually avoids the problem.

Once the builder has constructed a stable, dependable power supply which delivers the optimum B+ voltage, he has <u>already</u> greatly improved the overall performance of the unit.

The filaments of the preamplifier tubes require energy, also. The 12AX7's filaments can be wired for either 6.3 or 12.6V operation. The output of the filament winding on the power transformer is not necessarily the deciding factor, since the advent of silicon diodes. Diodes permit the inexpensive construction of a voltage doubler, tripler, or even quadrupler circuit, when used with appropriate capacitors. The best situation, however, is one in which the voltage is already correct and the capacitors can be used simply to reduce ripple and smooth the output of the filament power supply. This will reduce hum to a negligible point.

Figure 20 shows some of the options available in the construction or modification of a filament power supply. Another

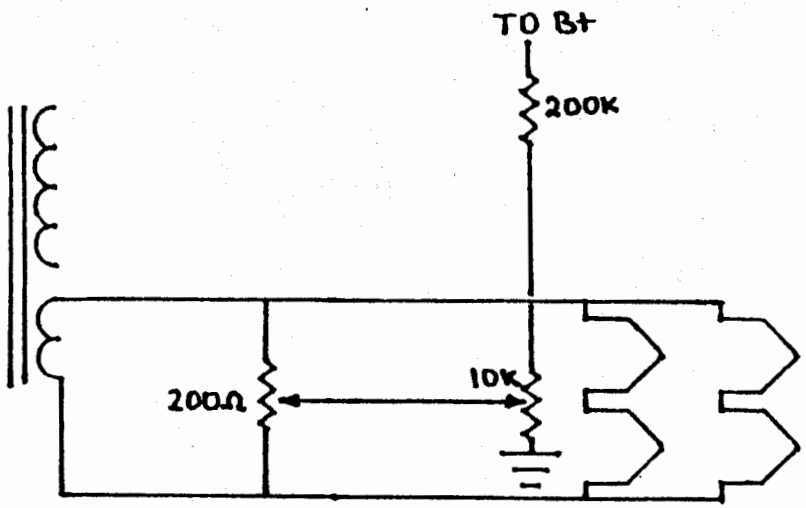

HUM-BUCKING CIRCUIT FOR AC HEATERS

When an AC power supply for the filaments is necessary, hum can be reduced by elevating the potential of the heater circuit. The 200k resistor is a capricious selection; the important point is that there be very little current flow, and that voltage division be along appropriate lines. An examination of the tube manual will show that there is a limit to the permissible voltage difference between the heater and the cathode, in most tubes. The circuit should be designed to stay within that limit.

Figure 21

possibility is the connection of the B+ (high voltage) to the filament circuit through a voltage divider. In some cases, lifting the potential of the filaments by 50 or 100V can subtly improve performance. Since circuits vary tremendously, Figure 21 suggests an easy means of improving AC filament supplies.

In developing a power supply for the filaments, it is only necessary that the appropriate voltage be available at the required current flow. Any combination of voltage doublers can be used, if required, but it is far better to use that space for large capacitors able to reduce ripple, and thus hum.

notes

chapter eight

preamplifier circuits

The transistor was invented ten years too soon! By the end of the Korean War, tube technology was moving rapidly, the economy was healthy, people were willing to spend money on entertainment and hobbies, and there was a burgeoning interest in the new LP record. If the first commercially viable transistor had reached the market in the mid-sixties, industry would have been forced to learn to use WWII and Korean War tube technology in audio applications. Amazing as it may seem, there is no significant difference in concept among all the tube preamplifiers manufactured to date! Virtually all are wired in series; though coupling varies somewhat. Had industry been forced into development of the cascode circuit, or series balanced circuits, the performance of these concepts might have eliminated the transistor from contention, except in the most inexpensive units.

As shown in Figure 22, the difference between tube preamplifier circuits is minimal. Only the Wallman cascode circuit appears significantly different. The purpose of this chapter is to explain the elements of the preamplifier circuit, pointing out those circuit elements which can and should be modified in order to improve performance. In order to ensure applicability of these techniques to virtually any tube circuit, certain omissions are deliberate. No tone control will be discussed, and switching will be assumed adequate on the

unit being investigated. Only the preamplification function itself is discussed.

The philosophy expressed in this chapter assumes that a proper power supply has been built, capable of delivering about 400V to the decoupling stage at a minimum of 15 milliamperes; that tone controls are absent, and that switching is adequate. All methodology leads to the circuit are shown in Figure 23. The figures illustrate circuit segments, with values similar to those normally found in preamplifiers of the sixties. In Figure 24, each value is replaced, in parentheses, with a recommended change, explained by the accompanying text.

Figures 25 and 26 present the recommended RIAA feedback circuits.

The conventional preamplifier will end the phono circuit with appropriate switching and volume/balance controls, with the signal then proceeding to the high level circuit. Depending upon the switching, that stage will "see" a choice of tape input, phono circuit, tuner, etc. The purpose of the high level circuit is further amplification and signal processing. It is from that circuit that scratch filters, loudness compensators, and tone controls are deleted, since the job of the high level circuitry is amplification with the lowest distortion and widest bandwidth possible. If the conventional series circuit is chosen, then the two stages are required in order to ensure that the phase is correct at output. It is possible, of course, to add a cathode follower to the output--since cathode followers do not change phase, no additional problems arise.

The typical circuit used in high level stages looks almost identical to those circuits prevailing in the low level stages. Two differences are found; addition of tone control circuitry and a lack of a complex RIAA feedback loop. In virtually all such devices, some sort of feedback will be found, consisting of at least a resistor and, possibly, some capacitance as well. Stripped of tone controls, filters, etc., the ultimate high level circuit will look approximately like Figure 14. Note the absence of electrolytic capacitors shunting the cathode resistors, and the great simplicity of the overall circuit. Some components, such as tape recorders, tuners, and strain gauge power supplies, may not need a high level stage at all. A simple volume control may be sufficient.

TYPICAL PHONO CIRCUITRY WITH RECOMMENDED CHANGES

General

The circuitry shown in Figure 27 is typical of "state of the art" in the late 1950s and early 1960s. The modification process is quite straightforward, though point-to-point wiring

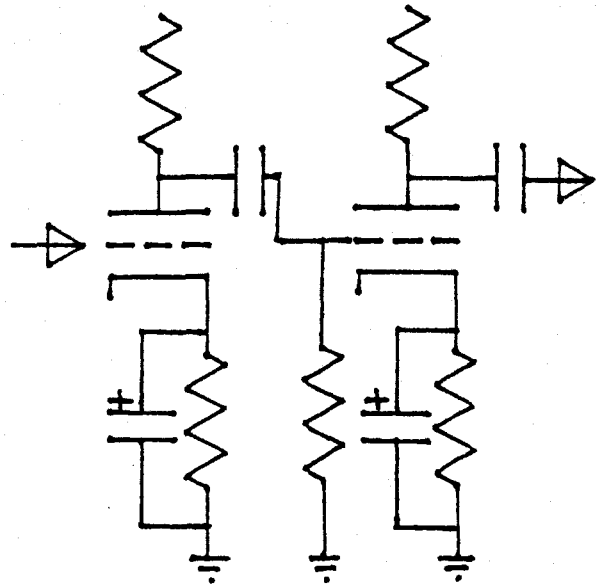

This is a simple RC coupled two stage phono circuit, typical of many commercial applications. Limiting factors are tube linearity (selection of the operating points of the tubes; cathode and plate load resistors), component stability, attenuation of low frequencies by the coupling capacitors, and the use of electrolytic capacitors in the cathode circuits to increase gain. These capacitors eliminate the local degeneration which significantly reduces distortion.

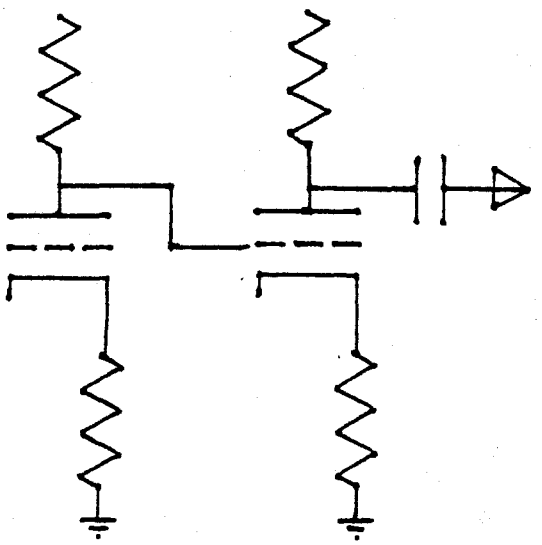

This is a simple direct coupled phono circuit, which implies extremely careful control of the voltage relationships present, and use of relatively stable circuit components. Limitations of this circuit are stability, tube linearity, and headroom variations due to slight changes in voltage relationships.

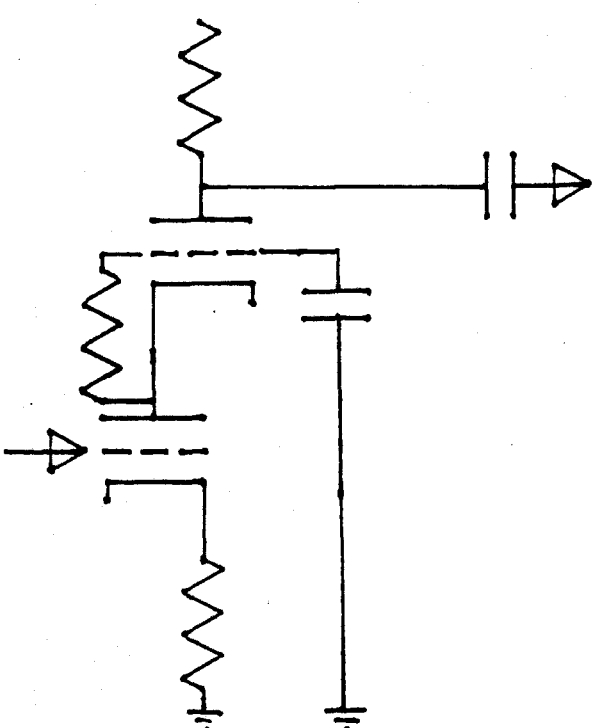

This is one form of the cascode circuit. It operates as one stage despite the use of two tubes, and is extremely quiet. Gain is about equivalent to that of a pentode, but there is none of the partition noise which characterizes pentode operation. The first tube operates as in any of the above circuits, but the second tube is a grounded grid amplifier. Limitations of this circuit are tube linearity, circuit stability, and suitability to the chassis selected. Of all the possible 12AX7 circuits, this one has the most headroom and requires the least feedback for control of distortion. Output impedance of this circuit is critical; a cathode follower must be used. Feedback can be conventional (beginning at the plate of the next stage) or coupled to the grid of the first stage.

Figure 22

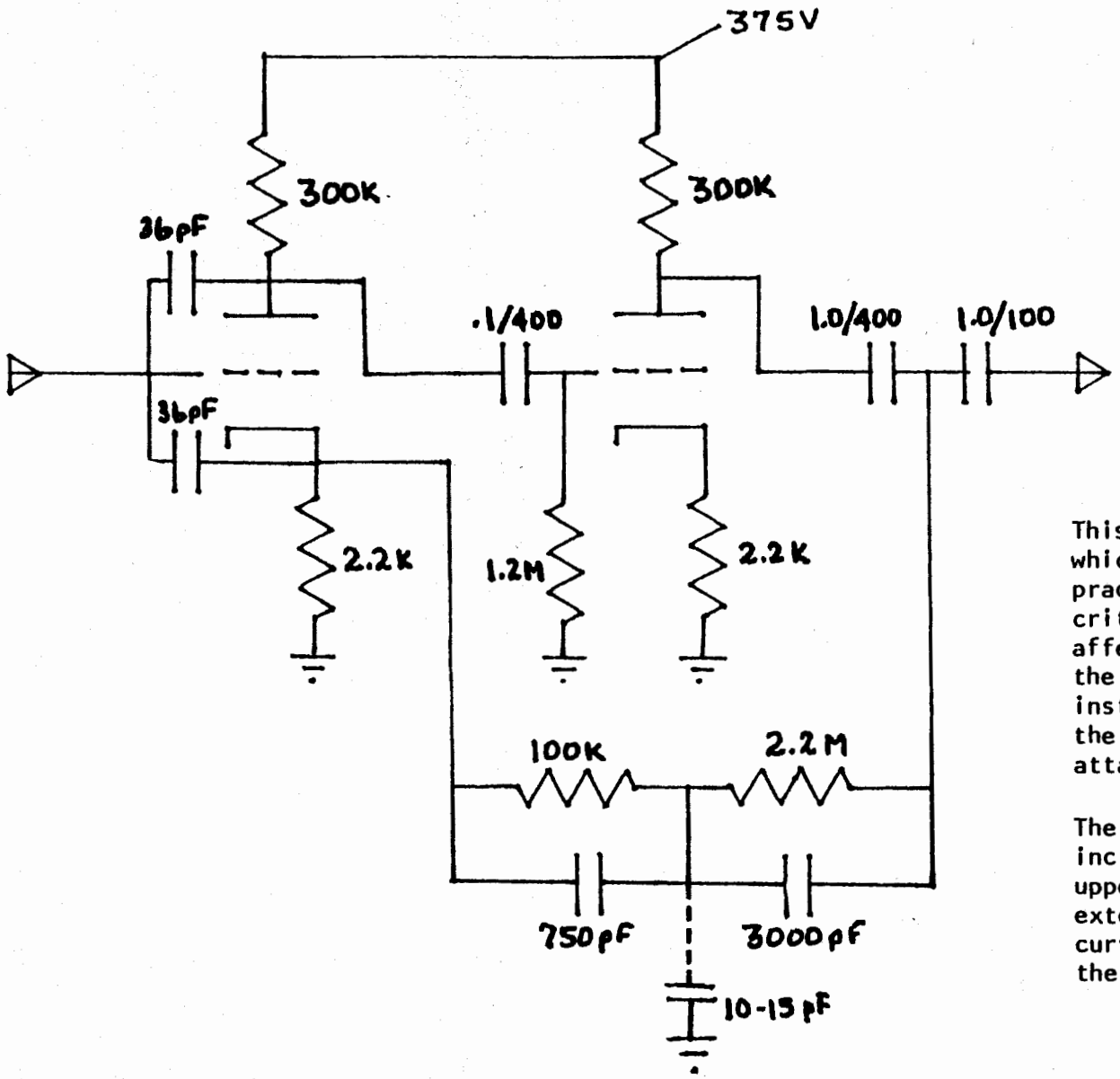

This is the phono preamplifier circuit which has met with great success in practice. Only a few of the values are critical; most can vary up to 20% without affecting performance. The simplicity of the circuit makes it suitable for installation in almost any chassis, and the voltage required (350-400) is easily attainable from most power supplies.

The 3000pF feedback capacitor should be increased by 100 pF if any harshness or upper midrange rise is encountered. To extend the high end (continuing the RIAA curve far beyond accepted limits), add the 10-15 pF capacitor shown.

Figure 23

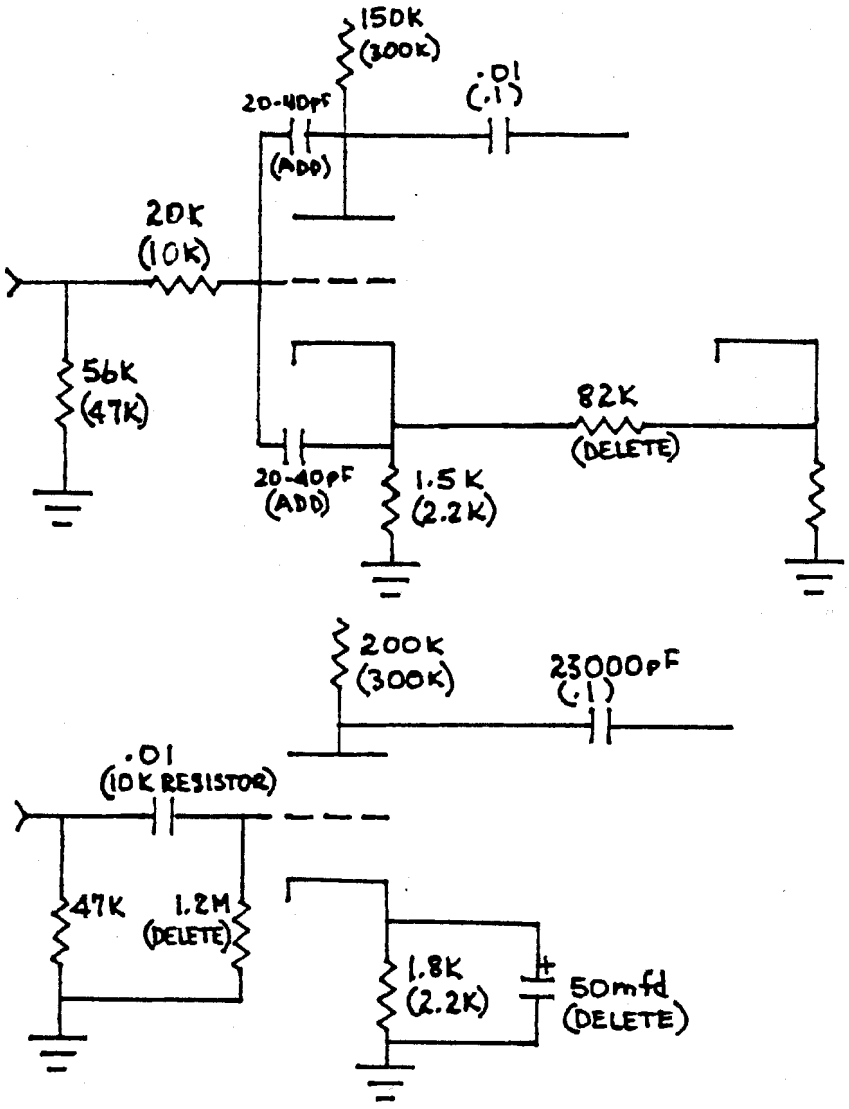

The changes in parentheses convert these circuits to the recommended circuit. Generally, all electrolytic capacitors appearing in the cathode circuits are deleted, all coupling capacitors are increased, and plate load and cathode resistor values are selected to put the tube (12AX7) into an area of optimum operation. To reduce low frequency losses, any input coupling capacitor is replaced with a 10k resistor. Metal film resistors are used throughout, even when values do not change. Positive feedback (the 82k resistor in the first example) is also deleted.

Figure 24

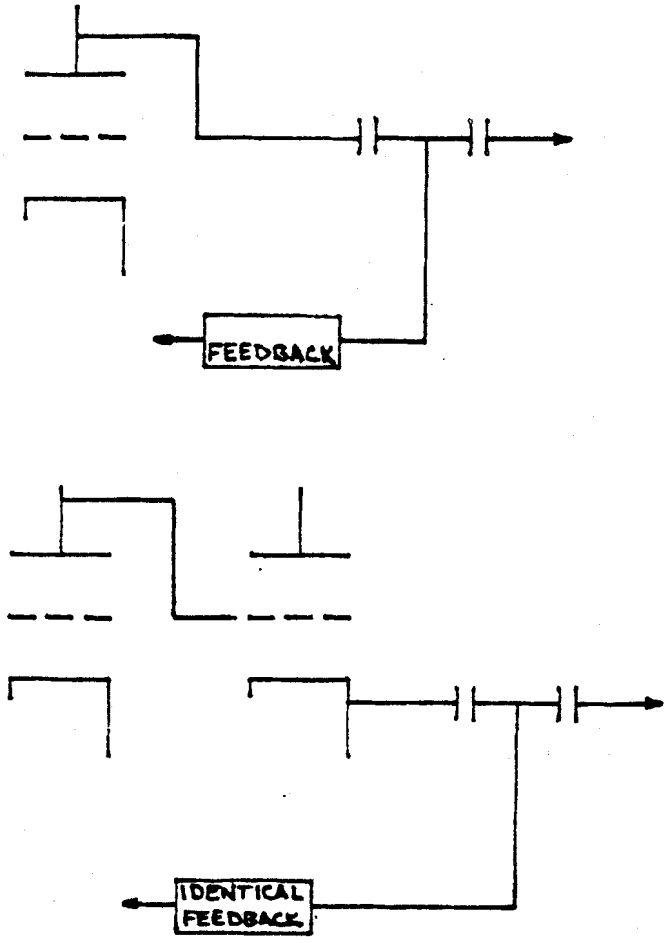

The first sketch shows the point at which the feedback loop normally begins in those circuits without a cathode follower. Note the use of a blocking capacitor between the plate and the take-off point for the feedback loop.

The second sketch includes a cathode follower. The feedback loop correctly begins after the cathode follower, which is in phase with the plate of the preceding tube. If the feedback loop includes the cathode follower, any distortion (however small) introduced by that additional stage will be reduced. The feedback circuit remains about the same within the impedance range of the cathode follower circuit and output circuit advocated by this text; no change is recommended. If the cathode follower is designed with an extremely low (below 20k) output impedance, the feedback circuit must be recomputed based on the impedances present.

Figure 25

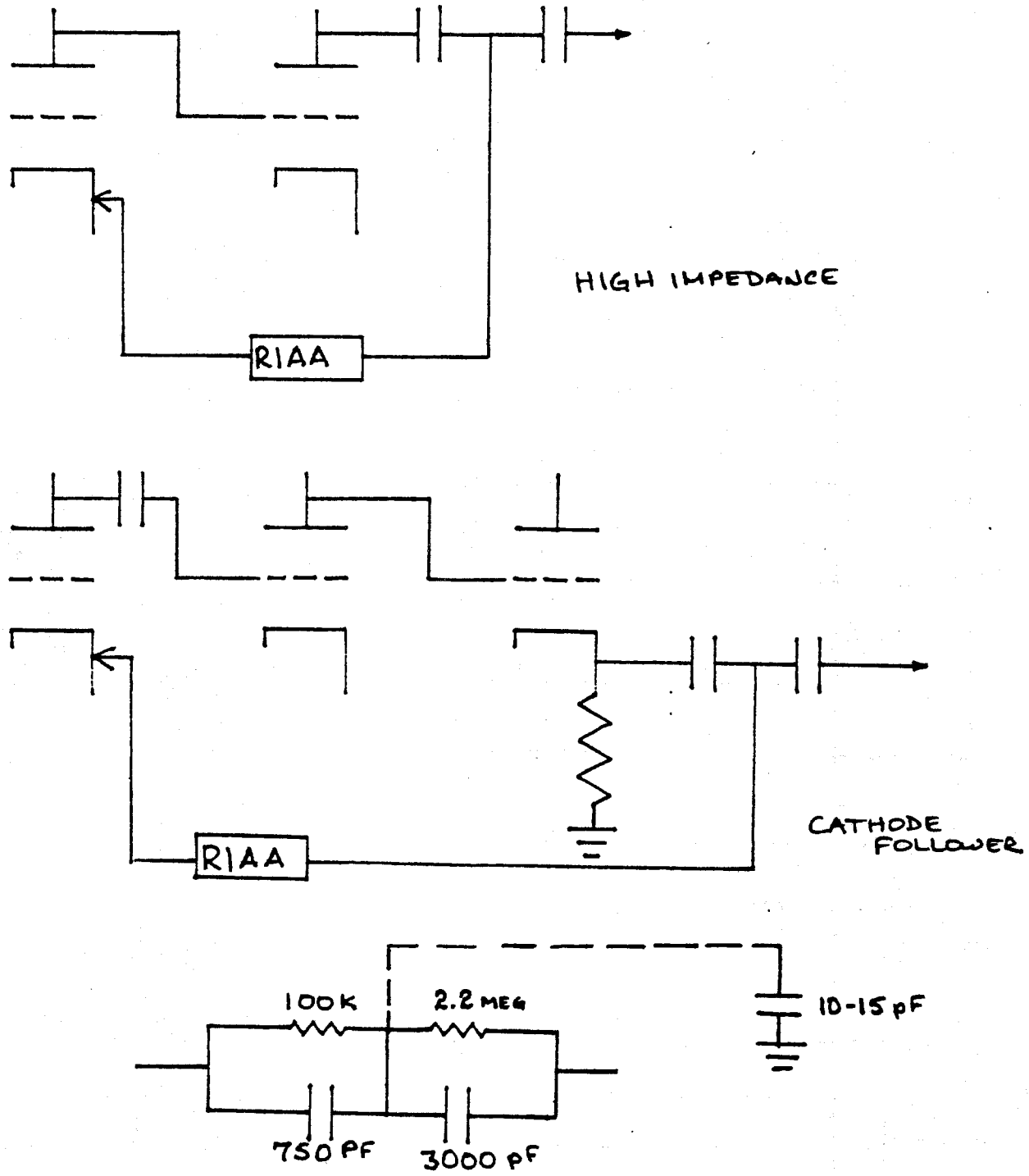

If feedback RIAA equalization is to be used, the circuit described above is recommended. Industry-standard values are used, which minimizes shopping problems, and the circuit itself is extremely accurate. Amazingly, it actually sounds better than other circuits which have the same electronic effect. The 3000 pF capacitor should be changed to 3100 pF if any high end harshness is noted. Further, the addition of the small capacitor from the midpoint of the RIAA circuit to ground will extend the RIAA curve considerably.

Figure 26a

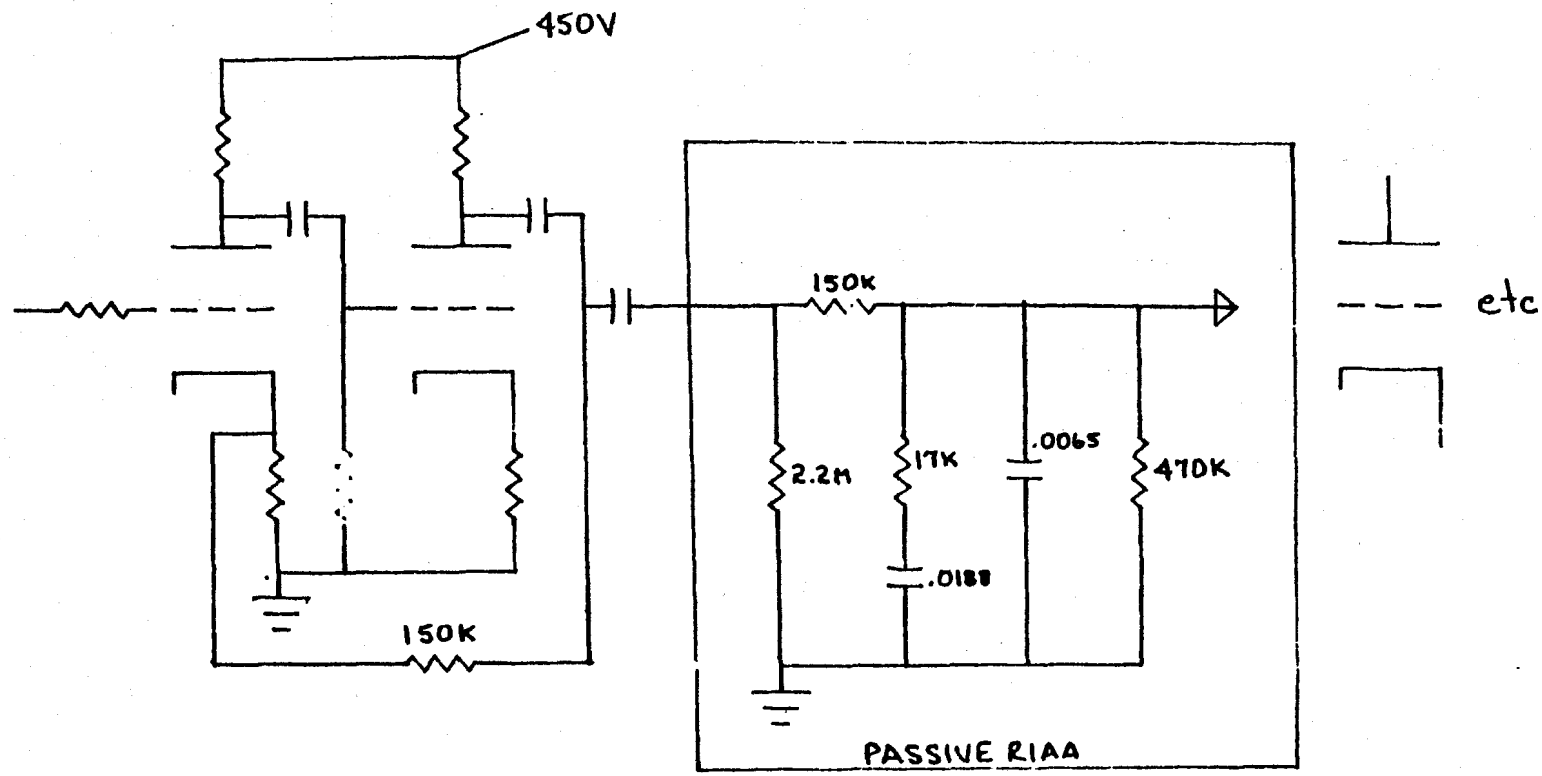

Passive RIAA equalization is potentially superior to negative feedback equalization. The large feedback resistor, plus local degeneration across the cathode resistors, provide sufficient control of distortion. The values in the passive circuit are approximate. The '17k' resistor is actually derived by placing an 18k and a 300k in parallel. The '.0188' capacitor is derived similarly - by placing a .02 and a .3 microfarad pair in series.

Figure 26b

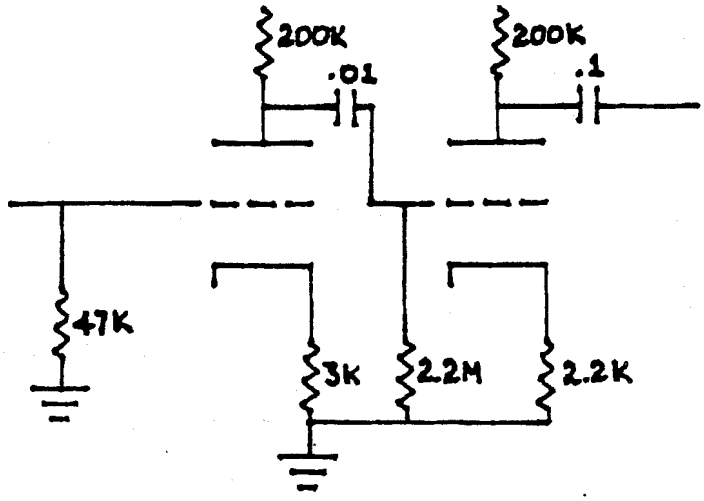

EARLY EICO

Note that the only major difference between this and the recommended circuit is the values of the capacitors and resistors involved. The basic layout of the circuits is almost identical.

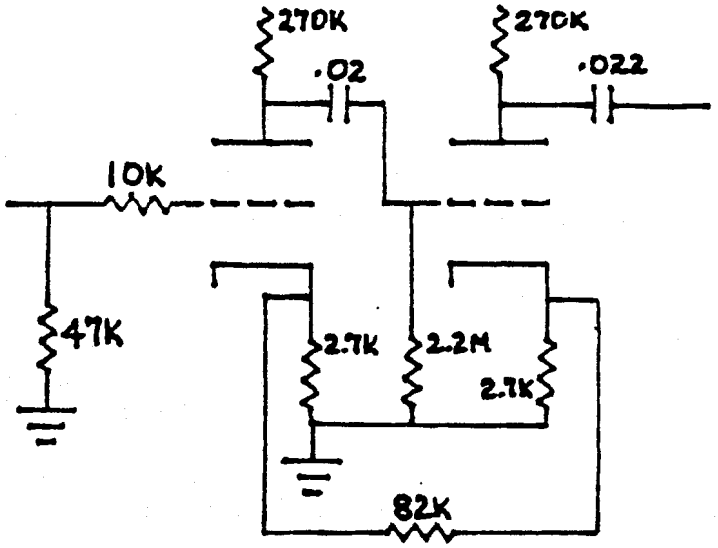

H. H. SCOTT

The positive feedback resistor was necessary to provide enough gain; it must be removed. Gain will be recovered through use of higher B+ and optimized circuit structure.

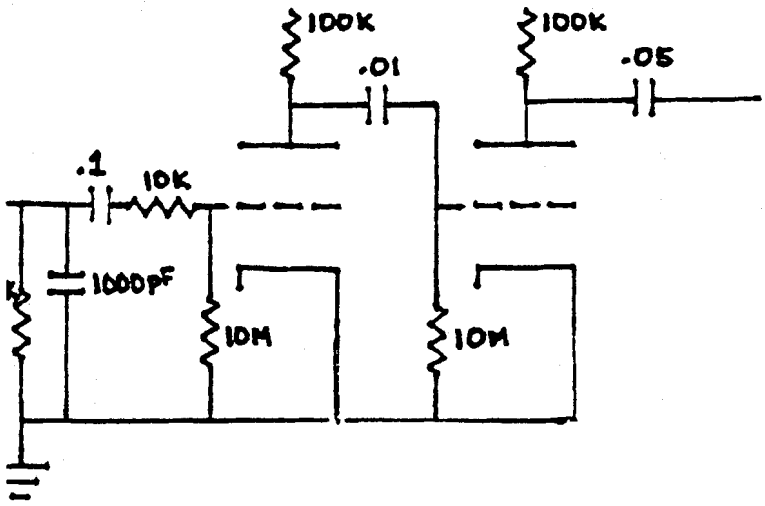

ARKAY

Because of point-to-point wiring, this unit is quite a bit of work. It's worth the effort, however, because the original circuit includes a choice of high or low impedance outputs.

Figure 27a

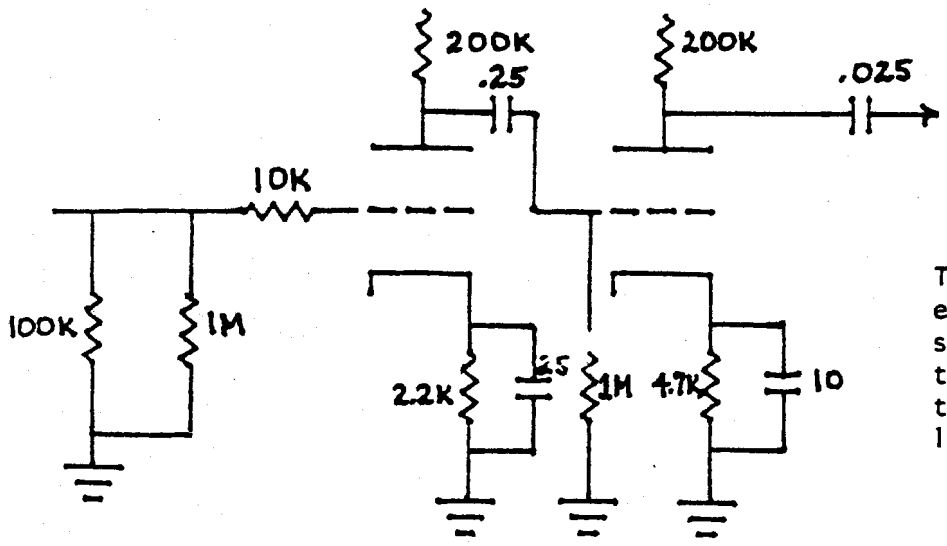

LATER EICO

This 'improvement' over the earlier Eico circuit is somewhat more work. Fortunately, the power supply will support the addition of at least one 12AU7 cathode follower.

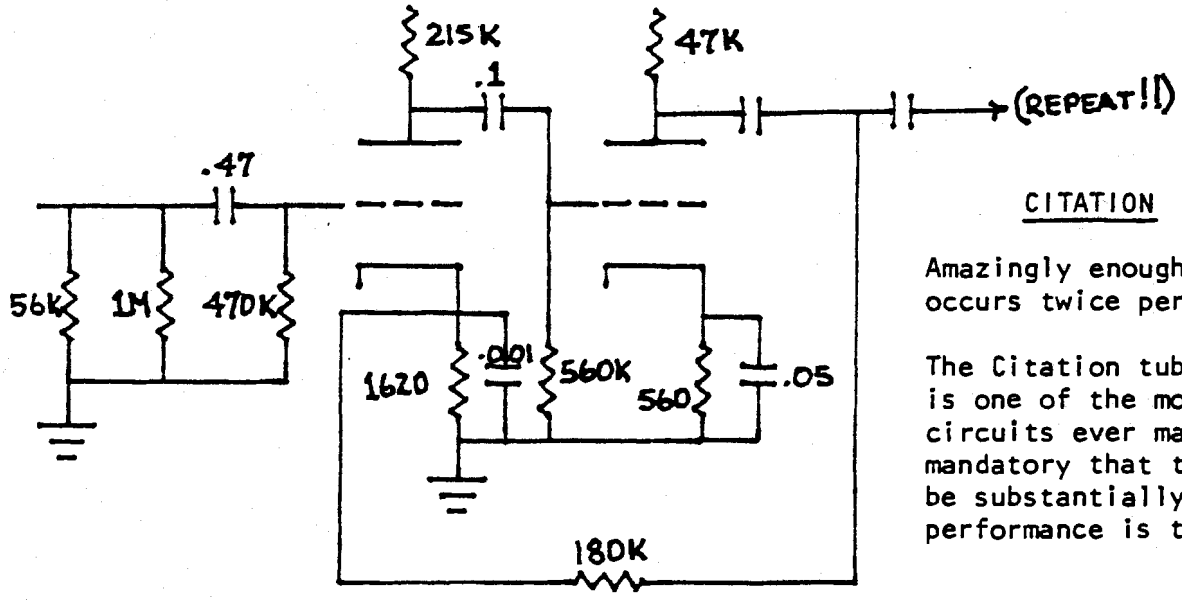

CITATION

Amazingly enough, this circuit occurs twice per channel!

The Citation tube preamplifier is one of the most complex circuits ever marketed. It is mandatory that the complexity be substantially reduced if performance is to be improved.

Figure 27b

sometimes makes the mechanical process a bit demanding. In many cases the RIAA circuit is buried in the switching networks. When that situation is encountered, it is recommended that all RIAA and other EQ components be completely disconnected, and that the "universal" RIAA circuit (2.2m parallel with 3000 pF, 100k parallel with 750 pF) be added between the output of the second stage and the cathode of the first stage. Of course, in replacing resistors, use metal or carbon film components of the appropriate power rating. In every case, the recommendations assume that the power supply has been improved and that available B+ has been increased to at least 400V. This dictates a change in the voltage rating of the coupling and blocking capacitors; 400V is the minimum acceptable.

Early Eico

This simple circuit differs only in component values from the phono stage recommended by this manual.

1. Add a 10k resistor between input and the grid of the first tube.

2. Change all four plate load resistors to 300k.

3. Change all four cathode resistors to 2.2k.

4. Change the grid resistors to 1.2m.

5. Change the coupling capacitors (between pin 6 and pin 2) to 0.1 mfd.

6. Change the blocking capacitor (from pin 1) to 1.0 mfd.

7. Change the second blocking capacitor to 1.0 mfd at 50V or more.

8. Begin the recommended RIAA circuit between the two blocking capacitors. Wire it from that point to the cathode (pin 8) of the first stage.

9. Assuming loudness contour is to be retained, begin the changes to the high level circuit by changing the plate lead resistor (pin 6) to 510k, and the cathode resistor (pin 8) to 5.0k.

10. Change the coupling capacitor from 25000 mmf to 0.1 mfd.

11. Change the grid leak resistor to 1.2m.

12. Change C32 and C17 (first coupling cap) to 1.0 mfd, and the following feedback resistor (33k) to 100k. If necessary, when listened to, add 10-20pF in parallel to the 100k to reduce brightness or harshness.

13. Add another 1.0 mfd (50V) capacitor from that point to the preamplifier output jack, eliminating the last stage of signal processing completely. That (now empty) socket can be used for a cathode follower, if required.

14. Add a resistor between the center terminal of the output jack and ground, computed to provide a total load of about 50k. (See section on impedance matching.)

Later Eico

The major difference between this and the earlier Eico is the presence of electrolytic capacitors between the cathodes and ground. Clip these and proceed as outlined above. Also, replace the 56k input lead resistor with 53k which, in parallel with the 1m resistor, will make the phono input impedance 47k, the industry standard.

H. H. Scott

There were several somewhat similar Scott circuits; this is typical.

1. Remove the 100k "high level" phono input resistor. If desired, a switch can be added to permit two low level phono inputs.

2. Change all four plate load resistors to 300k.

3. Change all four cathode resistors to 2.2k.

4. Clip and discard the 82k resistor between pins 3 and 8.

5. Change the grid leak resistors to 1.2m.

6. Change the coupling capacitors (from pin 6 to pin 2) to 0.1 mfd.

7. Change the blocking capacitor from 0.022 to 1.0 mfd.

8. Add a 1.0 mfd (50V) capacitor from the blocking capacitor (use the blank solder point on the terminal strip) to terminals 4 or 10, as appropriate, clipping the wire leading to pin 2 from that point.

9. Add the recommended RIAA feedback circuit from the blocking capacitor (wired to pin 1) to the cathode of the first stage, pin 8, clipping all components wired to the "TAPE-RIAA" switch.

10. Rewire the high level circuit as described for the Eico, plus:

11. Clip the electrolytic capacitors from pin 8 to ground.

12. Clip both leads to the treble control, wiring the 0.1 mfd capacitor between pins 6 and 2 of the tube socket.

13. Add a 1.2 m resistor between pin 2 and ground.

14. High level stage per Eico instructions.

Arkay

Whether built as a kit or bought prewired, the Arkay preamplifiers were real "sleepers"; it is a pity they did not survive. The original circuit used a grounded cathode plus a sophisticated method of achieving grid bias. Obviously, virtually all the components must be changed. The project will be worth the labor, however, since the Arkay came with both a cathode follower and high impedance output, and lends itself to cosmetic improvement. The power supply is quite massive, and will support a lot of circuitry. Addition of a simple headphone amplifier is a job for the experienced technician, but is easy on this unit because there is both space and power.

1. Remove the 1000 mmf capacitor from input to ground.

2. Remove the 10 m resistor between pin 7 and ground, and replace the series 0.1 mfd capacitor with a bit of wire.

3. Pins 8 and 3 are wired to ground; replace the wire with 2.2k resistors.

4. Replace the plate load resistors (pins 6 and 1) with 300 k.

5. RETAIN THE EXISTING RIAA CIRCUIT (47k, 2000 mmf) until you have listened to the unit; replace it only if dissatisfied.

6. Replace the coupling capacitor (10000 mmf) with 0.1 mfd.

7. Change the 10m resistor (from pin 2 to ground) to 1.2m.

8. Change the 0.05 mfd capacitor (wired between the two switches) to 1.0 mfd/400V. If the RIAA circuit is changed, add another 1.0 mfd (50V) capacitor in series with the first one; the RIAA feedback circuit begins between the two.

9. Wire the high level circuit per the instructions for Eico, but:

10. Remove the 1.5m resistor between pins 3 and 8.

11. Remove the 3900 mmf capacitor from pin 3 to ground.

12. Bypass the tone controls, but retain the cathode follower circuitry, as installed, except for a change to metal film resistors and an increase of the output capacitor to two 1.0 mfd capacitors, between which the feedback loop begins.

13. Use the largest feedback resistor possible (180k usually works well), reducing it only if necessary.

Citation I

This is one of the "busiest" circuits in the industry! The nine stages per channel can be reduced to four, and should be for the sake of performance. The job is a big one, and is best begun by ripping out almost everything. One advantage gained, however, is the ability to use just half of each tube (rather than both halves) and still have half a tube available for a cathode follower. The step-by-step procedure is somewhat abbreviated, since it is expected that the task would be undertaken only by an experienced builder. The description is for one channel; the other is done similarly.

1. Rip out everything except the switching circuits.

2. Use half of V6 as the first stage, eliminating the variable turnover and rolloff. Substitute the recommended RIAA feedback circuit instead, between V6 and V7.

3. Use half of V7 for the second stage, eliminating the rather preposterous feedback loop and other associated circuitry. Replace the 0.1 and 0.47 capacitors with 1.0 mfd capacitors of 400 and 100 volts, respectively.

4. Wire up the high level circuit on half of V8 and half of V9, retaining the low cut switch (if desired).

5. Use 12AX7s stead of 12AT7s.

6. Use V5 for the cathode follower.

7. Retain the excellent tone controls....if required.

Good luck! The power supply, by the way, is stout enough to support a small amplifier.

ARC

The ARC preamplifiers have been universally excellent, but can be (subtly) improved. ARC's radical departure from vacuum tubes (the new SP4 FET unit) supports the contention of that firm that it is quality which is sought rather than tradition. The earlier models of the ARC preamplifier can be improved by adding capacitance and active regulation to the power supply, in accordance with information elsewhere in this manual. All models can be improved by the following procedures:

1. Remove C5, a 5 pF capacitor in one of the feedback loops. Rise time (transient response) should improve, though careful evaluation must take place to ensure that high frequency roughness doesn't occur.

2. Adjust optimal feedback resistance. The 301k resistor once in parallel with C5 can be varied from 220k to 330k, as required to produce the best possible results.

3. Extend the RIAA curve. At the juncture of the 3000 pf/2.2m pair with the 750 pf/100k pair, add a small capacitor to ground. That capacitor can only be chosen through listening, but will probably be between 20 and 60 pF.

4. Remove C39, a 1.0 microfarad capacitor, replacing it with solid wire. This change will slightly improve low frequency response and definition.

5. Split the blocking and coupling capacitors, as shown, so the signal path is through only one per stage.

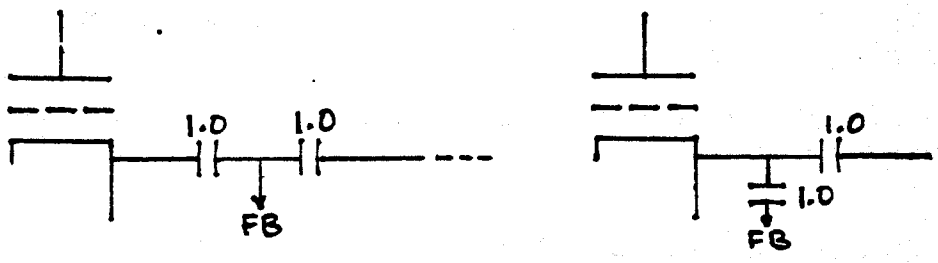

STEP-BY-STEP MINIMOD: HEATH, SCOTT, KNIGHT, FISHER, OTHERS.

1. Mount a 10 Henry (or larger), 20 ma, 1000 ohm (or less) choke at any convenient point on the chassis or back panel, away from the phono circuit or input jacks.

2. Twist the leads together and route them toward the multi-section filter capacitor, which should be rated at 450V.

3. Locate the 'first' resistor in the B+ supply (about 10k). Rectifier output goes to the first leg of the capacitor, that resistor is between that capacitor section and the next. Remove the resistor completely, noting its location.

4. Replace the resistor with the two leads from the choke.

5. With silicone seal or other suitable adhesive, mount a 200 mfd/450V electrolytic capacitor at any convenient point on the chassis (Sprague TVA 1720 is ideal).

6. When the adhesive is cured, solder the negative lead of the capacitor to the common ground terminal near the multi-section capacitor.

7. Solder the positive lead (well insulated) to the B+ terminal on the filter capacitor which supplies the first tube in the phono circuit.

8. Remove any and all capacitors between any cathode (pin 3 or 8) and ground, throughout the circuit.

9. Remove <u>any</u> resistor or capacitor directly connecting pins 3 and 8 of <u>any</u> two tubes in the phono circuit.

10. Change the plate lead resistor of the first two stages (between pin 1 and B+, or between pin 6 and B+) to 300K.

11. Change the cathode resistor of the first two stages (between pin 3 or 8 and ground) to 2.2k.

12. Increase (by a factor of at least two) the capacitance of all coupling and blocking capacitors.

13. Change as many resistors as possible in the phono circuit to 1% metal or carbon film.

14. Use Telefunken, Mullard, Amperex or Siemens tubes, at least in the phono circuit.

15. Disconnect all RIAA circuitry, replacing it with one of the recommended networks.

<u>Step-by-Step: Dynaco PAS and Similar</u> (see Figure 28)

1. Remove tone controls and all associated circuitry from each channel, including the 0.0075, 0.002, 0.02, and 1.0 mfd capacitors and the 1k resistor.

2. Remove all resistors from the four-section electrolytic capacitor (assumed to be in good condition).

3. Mount three chokes on the back panel; each should be rated at about 10 Henrys, 10-15 ma, and about 2000 ohms (or less). Leave the leads long; if they are short, extend them as required to reach the filter capacitor. If a soldered extension is required, ensure the joint is well insulated.

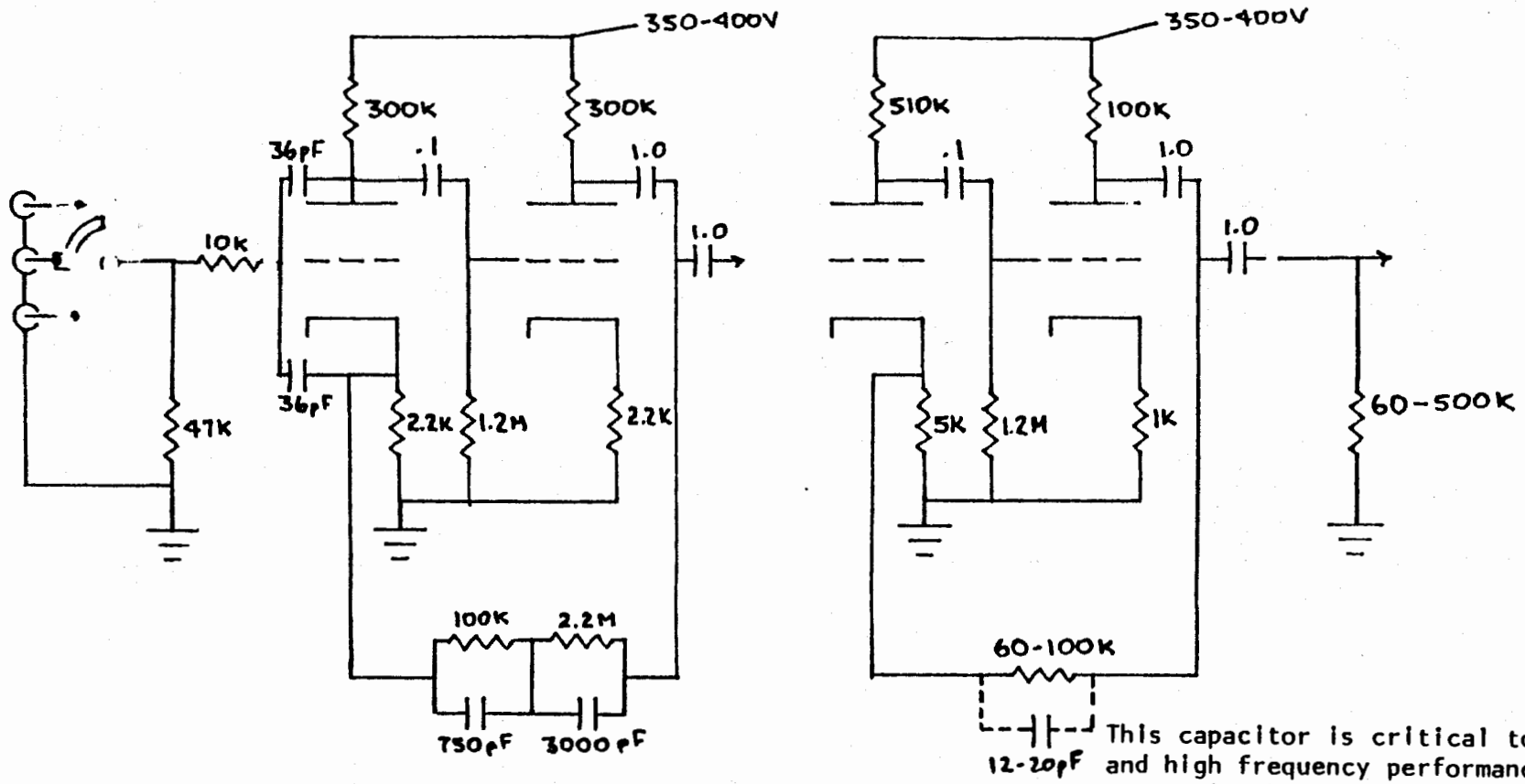

This capacitor is critical to definition and high frequency performance. A compromise between these factors and smoothness must be made.

THE DYNACO PAS

As in all circuits in this manual, feedback is treated as a necessary evil. Reduce the feedback in the high level circuit by using the largest resistor practicable. Avoid use of a parallel capacitor unless high frequency instability becomes a serious problem.

The circuit shown is outstanding in every way. High frequency response depends upon considerable stray capacitance within the circuit, due to bundling of wires and the use of shielded cable of average capacitance. In some exceptional cases, it may become advisable to roll off the high end slightly, by adding 40-100 pF in parallel with the 3000 pF capacitor in the RIAA circuit. An alternative, if tape outputs are used, is the inclusion of the original Dyna scratch filter in the high level circuit.

Figure 28

4. Twist each pair of leads together, and route them through any convenient chassis cutout. Attach one lead to the □ and the other of the pair to △ .

5. Attach another lead to the △ , and its partner ⌓ .

6. Attach the last pair to △ and ▬ .

7. With Dow or GE silicone seal, or a comparable adhesive, attach 200 mfd/450V and 100 mfd/450V capacitors to the front panel in place of the tone controls. When the adhesive is fully cured, run the (well insulated) leads past the pilot light bulb to the vicinity of the filter capacitor.

8. Attach the positive (+) lead of the larger capacitor to ⌓ .

9. Attach the positive (+) lead of the smaller capacitor to ▬ .

10. Attach the negative (-) leads of the two capacitors to the ground terminal tab on the filter capacitor.

11. Recheck all power supply connections, insulation, and condition of wires to solder points on PC-5 and PC-6, and solder all terminals on the filter capacitor.

In all subsequent instructions, "replace the _____ resistor" requires replacement with a metal film or carbon film unit of the same resistance and at least equal power rating.

On PC-6:

12. Replace the 47k resistors between points 11/13 and 4/6.

13. Replace the 1.2m resistor running from pin 7 to ground.

14. Replace the 10k resistors from solder points 13 or 6 to pin 2.

15. Remove the other 47k resistor between pins 3 and 8; discard.

16. Replace the 150k and the 100k (plate load) with 300k.

17. Replace the 1k cathode resistors with 2.2k.

18. Remove the resistors and capacitors from the center wafer of the selector switch, and all wires from that wafer to PC-6. The wafer should be left quite naked, and all leads unsoldered from the board at points 2, 3, 8, and 9. Discard the 27k resistors.

19. Replace the 68 pF capacitors with the 750 pF capacitors removed from the wafer.

20. Replace the 4.7M resistors with 2.2M 1% resistors.

21. Add a 250 pF 1% capacitor in parallel with each existing 2750 pF capacitor; that is between solder points 8 and 9, 2 and 5. This circuit now has three phono inputs!

22. Replace the 0.1 mfd capacitors between solder points 7 and 9, 1 and 3 with 1.0/100V capacitors.

23. Replace the other 0.1 mfd capacitors with 1.0 mfd/400V.

24. Replace the 0.05 mfd capacitors with 0.1 mfd/400V.

25. At the "first" tube socket, solder matched pairs of capacitors rated at from 24 to 39 pF at 500V from pin 2 to pin 3 and from pin 2 to pin 1.

On PC-5:

26. Solder jumpers between solder points 4 and 6 and between 11 and 13.

27. Remove the scratch filter switch and the leads to solder points 15 and 17.

28. Insulating the leads well, solder a 4.7M resistor between solder point 15 and ground, and between point 17 and ground.

29. Replace the 18k resistors with 10k.

30. Replace the 470k plate load resistors with 510k.

31. Replace the 4.7k cathode resistors with 5k.

32. Replace the 0.02 coupling capacitors with 0.1 mfd/400V.

33. Replace the 0.22 blocking capacitors with 1.0/400V.

34. Add a 1.0 mfd/100V (50V is okay) between solder points 5/6 and 12/13.

35. Replace the 47k feedback resistors with 62k to 100k--use max resistance consistent with distortion.

36. Replace the 100k plate load and 1k cathode resistors. If a cathode follower tube is to be used, change the second plate load to 300k and the cathode resistor to 3.3k, and remove the 62k and 510k lead resistors. If no cathode follower is used, install a load resistor which will place a 50k ohm load on the unit, amp considered.

37. On the mode selector switch, replace the 47k resistors.

38. Replace the dual balance potentiometer with a checked unit of better quality, with a measured resistance of 750k.

39. Replace the dual 250k volume control with a checked unit of better quality; if the loudness switch is to be retained, the pot must have an appropriate tap.

40. Jumper from solder points 4 to 6 and 11 to 13.

41. Recheck all connections and solder joints throughout the unit, rechecking whenever there is the slightest suspicion of a cold solder or rosin joint.

42. With only the rectifier tube in place, turn on the unit. Voltage should be approximately 400 at pins 1 and 6 of each tube socket. Leave the unit on for two minutes, and check the voltage at pins 2 and 7 of each tube socket. If <u>any</u> DC voltage appears at any of these pins, replace the preceding coupling or blocking capacitor. Also check for DC voltage at each output from PC-5, with the same remedy if any voltage is present.

43. Shut the unit off and wait five minutes to permit the high voltage to leak away. Plug in the tubes.

Frills:

1. Epoxy the case.

2. Add a ground terminal to the rear panel.

3. Replace the faceplate and knobs.

4. Add a fuze in the transformer primary circuit. Use a one-half amp slo-blo.

5. Replace the 2000 mfd electrolytics in the filament supply with much larger units--as large as space will permit. Watch polarity!

6. Add 50-100 pf in parallel with each 2750/250 pfd in the RIAA, if treble seems a bit harsh.

Step-by-Step: Cathode Follower Installation

The cathode follower acts somewhat like a transformer, as it converts from high impedance to low. Fortunately, unlike a transformer, it is nearly distortionless due to the fact that 100% degenerative feedback takes place in the cathode circuit.

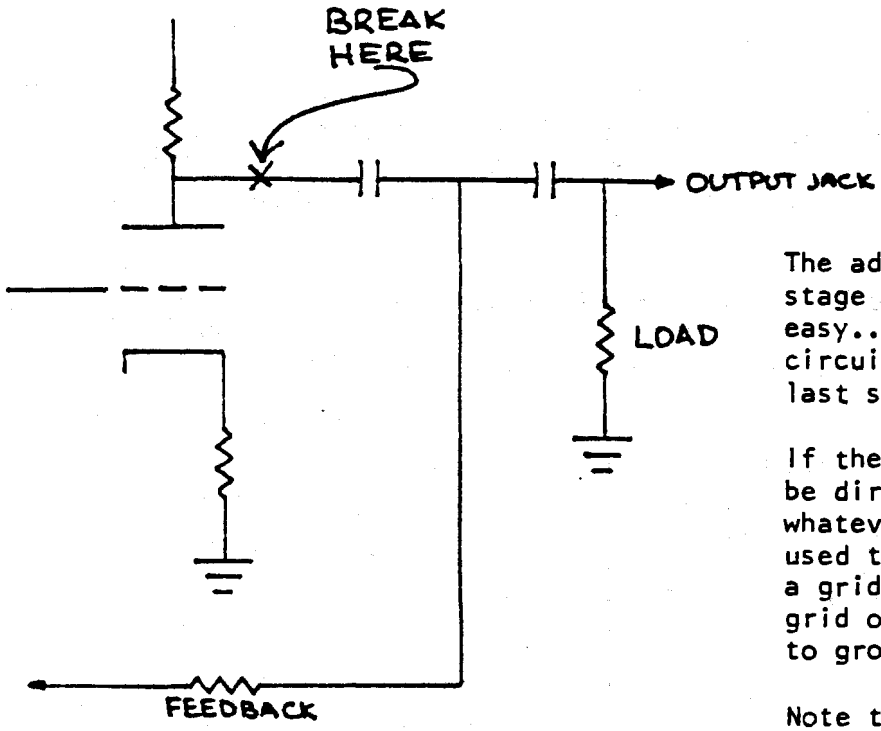

The addition of a cathode follower stage to the preamplifier is quite easy... simply make a break in the circuit between the plate of the last stage and the first capacitor.

If the cathode follower stage is to be direct coupled, add no components whatever. If a capacitor is to be used to couple the two stages, add a grid leak resistor from the grid of the cathode follower tube to ground.

Note that feedback doesn't change.

The easiest method of doing this job on the typical (PAS) preamp is to punch a hole in the chassis for the new tube, power up the tube socket with B+ and filament energy, and then run two wires per channel to the printed circuit break, as described in the text.

The size of the coupling capacitor is not critical; optimum for a circuit in which the preceding plate load resistor is 100k is about .2 mfd. If the preceding plate load resistor is 300k, use .1 mfd.

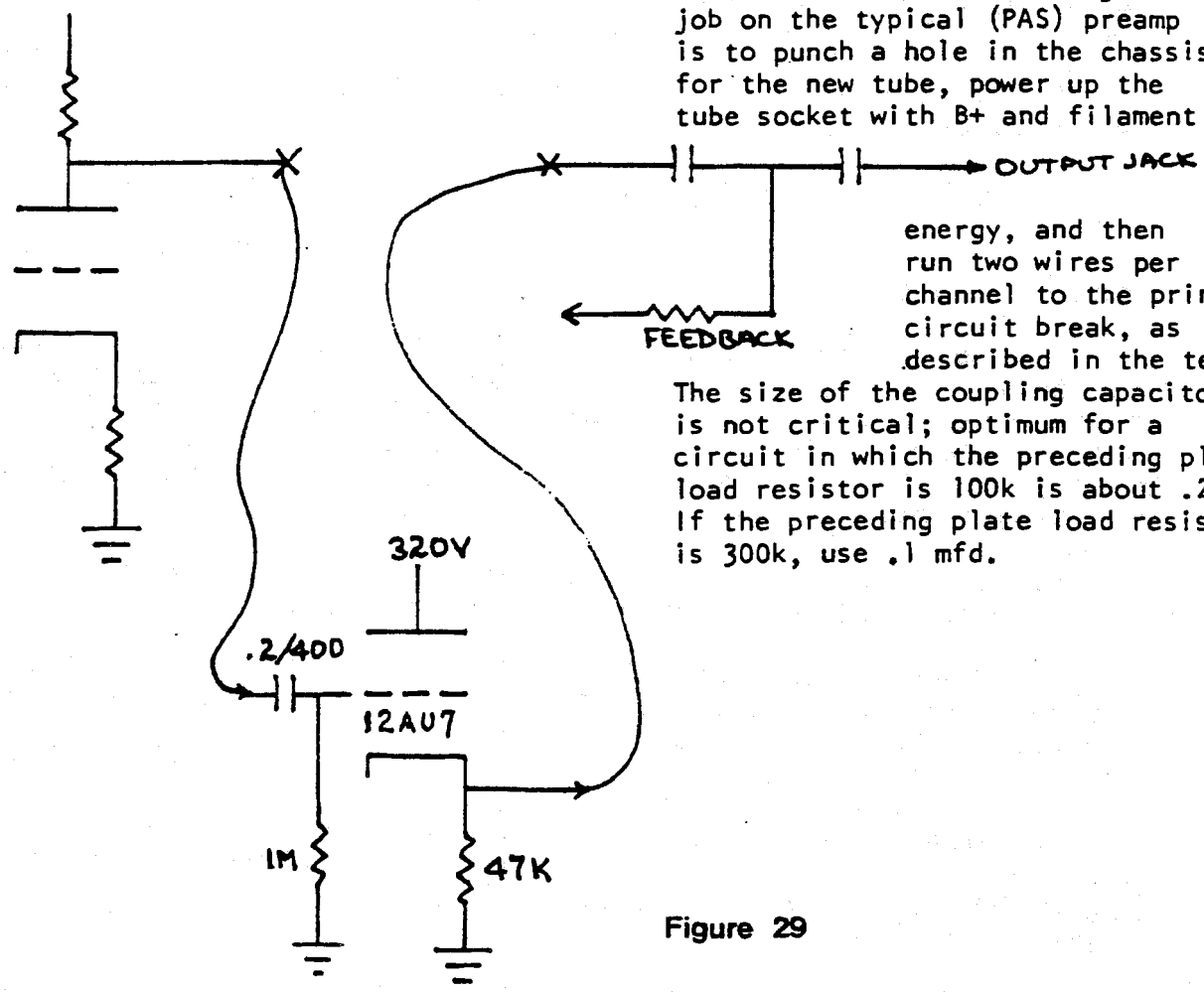

Figure 29

For the purposes of this text, a 12AU7 will be used as the cathode follower tube; the relatively high plate current of this tube necessitates a careful check of the current handling capability of the power transformer. The recommended circuit is shown in Figure 29.

1. In any convenient location, cut a hole in the chassis to accommodate a 9-pin tube socket. In those units where portions of the circuitry are being depleted, any vacant tube socket may be used.

2. Wire the filaments, ensuring that not more than 12V appears across pins 4 and 5. In those units using a 24V filament supply, with tubes in series, tap the AC supply leading to the filament voltage doubler; AC, at this stage, will not usually cause a hum problem. If hum appears in the finished product, try wiring pin 9 of the tube to ground.

3. Break the output of the previous stage between the plate and the first capacitor. Wire the plate to the grid of the cathode follower tube, through a 0.2 mfd 400V capacitor. Then connect a wire from the cathode of the 12AU7 (pins 3 or 8) back to the break in the output circuit.

4. Solder a 47k RN70 or 75 metal film resistor between the cathode and ground.

5. Solder a 1.2 meg resistor from grid to ground.

6. If any load resistors were present in the original output circuit, remove them.

7. Add a single point terminal near the original filter capacitor. Solder a resistor between the main B+ tap and the terminal, as required to bring the B+ of the cathode follower to about 320V; this must be checked after installation is complete, but if the source is about 400V, begin the trial and error process with an 8.2k resistor.

8. Add a decoupling capacitor, an electrolytic rated at 40 mfd or more at 450V, from the terminal to ground.

9. Connect the two plates (pins 1 and 6) of the 12AU7 together, and connect a wire from either pin to the B+ source terminal installed in Step 7 above.

10. Check the unit, plug it in, and turn it on. After a ten-minute warm-up, check the B+ appearing at pins 1 and 6; it should be about 320V. If it is higher, increase the dropping resistor (originally 8.2k) between the B+ source and the single-point terminal.

11. Check the voltage between the cathode and the grid. The cathode should be (relatively) positive.

12. This circuit can be used to couple a tube preamplifier to a solid state amplifier with an input impedance as low as 15k, with an acceptable loss in performance.

Tape Loops

Every modern preamplifier includes at least one tape loop. It is possible to add such a feature to older units, or to increase the number of loops available. All that is required are appropriate jacks on the rear of the chassis, and space for one or more switches (double pole, double throw-no center off) on the front.

The conventional tape loop looks like this:

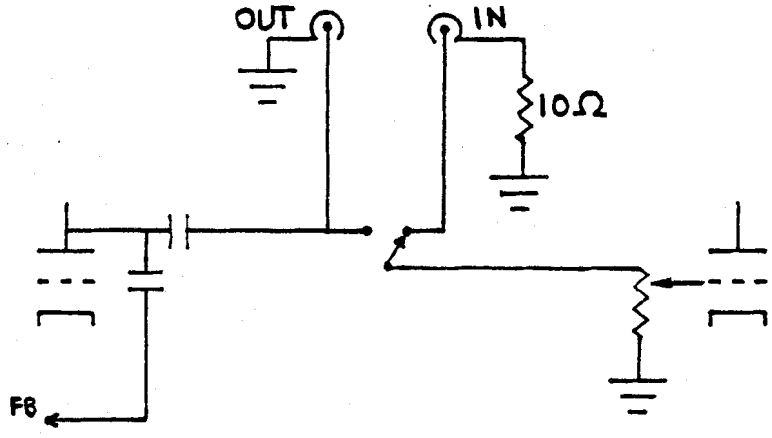

Note that the output of the preceding stage is always connected to the device plugged into the tape jack, regardless of the position of the TAPE or MONITOR switch. This means that use of two tape loops, each wired to a solid state component with 20k input impedance, will place a 10k load on the preceding electronics. This is unacceptable, of course, unless a carefully engineered cathode follower has been added. In order to add another tape loop, simply break the lead from the existing switch, or from the earlier stage, and wire the circuit as follows:

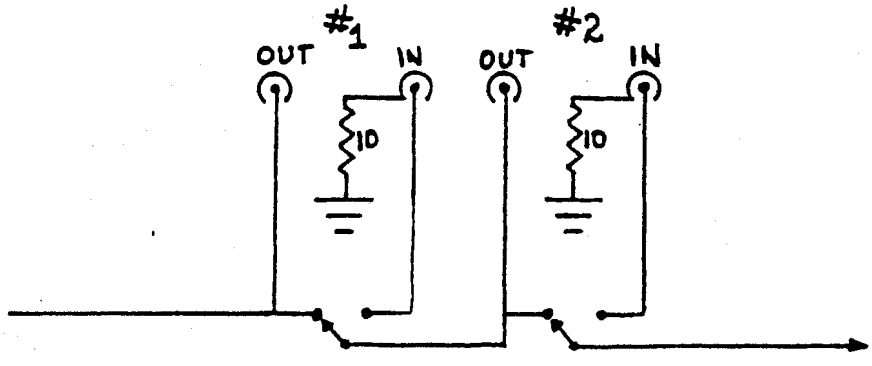

notes

chapter nine

strain gauge and moving coil cartridges: tube applications

The construction of a vacuum tube analog of almost any solid state component is possible, but the designer must weigh the advantages of each type of device in determining the most cost-effective combination of compromises. The technically inclined audiophile, however, is not attempting to design or build to compete on the open market, but to suit his own ear. Industry may worry and fret over a decision which raises the parts cost of an item by a dollar, knowing that the retail price will be moved at least five dollars. The audiophile is happy to spend the dollar if it results in a sonic improvement.

The devices described in this chapter may not be commercially feasible, but are sonically spectacular. Of course, should the market move to a point where it will support commercial production of these devices, the author reserves the right to exploit that event.

STRAIN GAUGE CARTRIDGES

The Win Labs, Panasonic (450 series), and Euphonics are examples of the most exciting concept of cartridge transduction; the strain gauge. The same principles govern all of these products, and any could be used with the circuitry and procedures described

below. Basically, the strain gauge itself is a beam of flexible material with a notch cut into it. One end of the beam is rigidly fixed and the other is distorted by movement of the stylus/cantilever assembly, which is coupled by a rubber connector. Across the notch is an element which changes resistance when strained. The power supply must be capable of sensing changes in resistance and converting that change into a voltage change which can be further amplified. In every case, this is accomplished with a current source, tailored to the requirements of the specific beam. The current flow through the beam varies as resistance is changed by the stylus assembly. Since the beam has a nominal resistance, the changing current flow produces a commensurate voltage change across the beam. That voltage change is a low level AC signal which can be preamplified and amplified by conventional devices. The object, then, of any tube power supply is the provision of a stable current source and the detection of any voltage changes occurring across the beam.

Figure 30 illustrates the principle involved. The initial (static) voltage across the beam will determine the current flow through it. It is necessary to ensure that current flow is within the limits imposed by the manufacturer of the beam; normally, there is a wide variance permissible. Typically, four millivolts will suffice and will ensure a low likelihood of damage to the beams, which are usually safe up to about twice that level. Obviously, with a fixed voltage across the beam (in a static condition), the current will depend only on the static resistance of the beam. If the current change of the two beams is to be matched, the beams must have the same DC resistance. Ideally the resistance of the beams will be within 5%, though tailoring of the current source will often compensate for somewhat larger differences. It is possible to split the current source power supply at several points. The closer to the cartridge the less the separation, of course, as a certain degree of interaction between channels must be accepted; see Figure 31.

In a vacuum tube device, it is necessary to begin with a quite high voltage which is then reduced (with a power resistor) to the level required by the cartridge. Voltage drop is the result of current flow, so if the cartridge does not complete the circuit, the high voltage will appear at the input jacks. This can be avoided by the insertion of a zener diode in parallel with the cartridge beam, which will limit the voltage at the jack to the zener value whether the cartridge is plugged in or not.

Figure 32 shows a good circuit for converting the current fluctuations through a beam to a voltage across it, which is then fed to the first tube in the amplification sequence. Since no electronic RIAA equaliziation is required (strain gauge cartridges sense changes in amplitude rather than velocity),

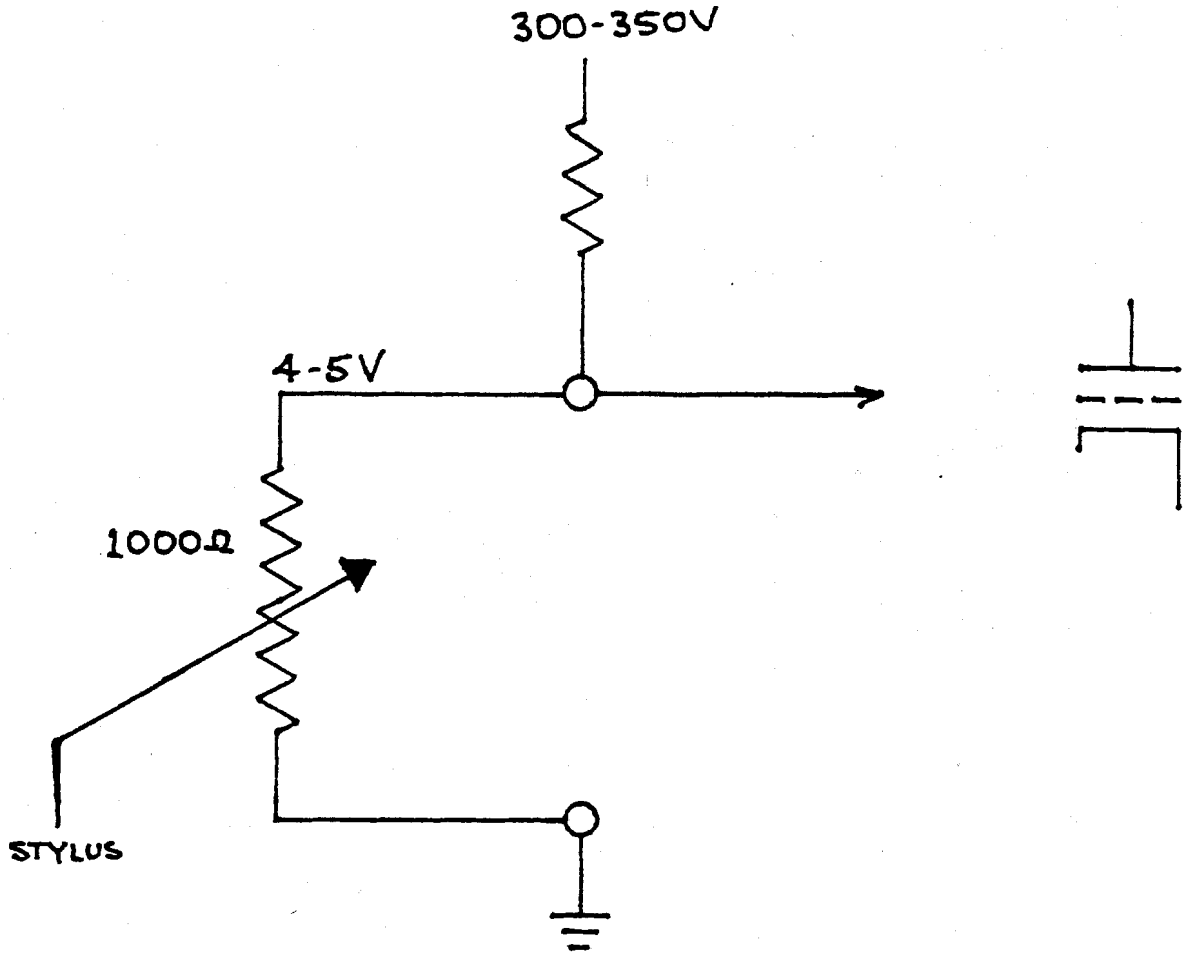

In its most simple form, the strain gauge acts somewhat as a variable resistor, or potentiometer. As the stylus causes deflections in the 'beam', the resistance across the unit changes. This variation in resistance causes a corresponding change in current flow, and in the voltage appearing at the 'top' of the beam. This variation is coupled to the grid of the first tube in the preamplifier, and the remainder of the process is conventional. The major requirement is the presence of a very stable, low noise, source of current to the beam.

THE STRAIN GAUGE

Figure 30

This illustration shows two means of providing the current required by the strain gauge beam.

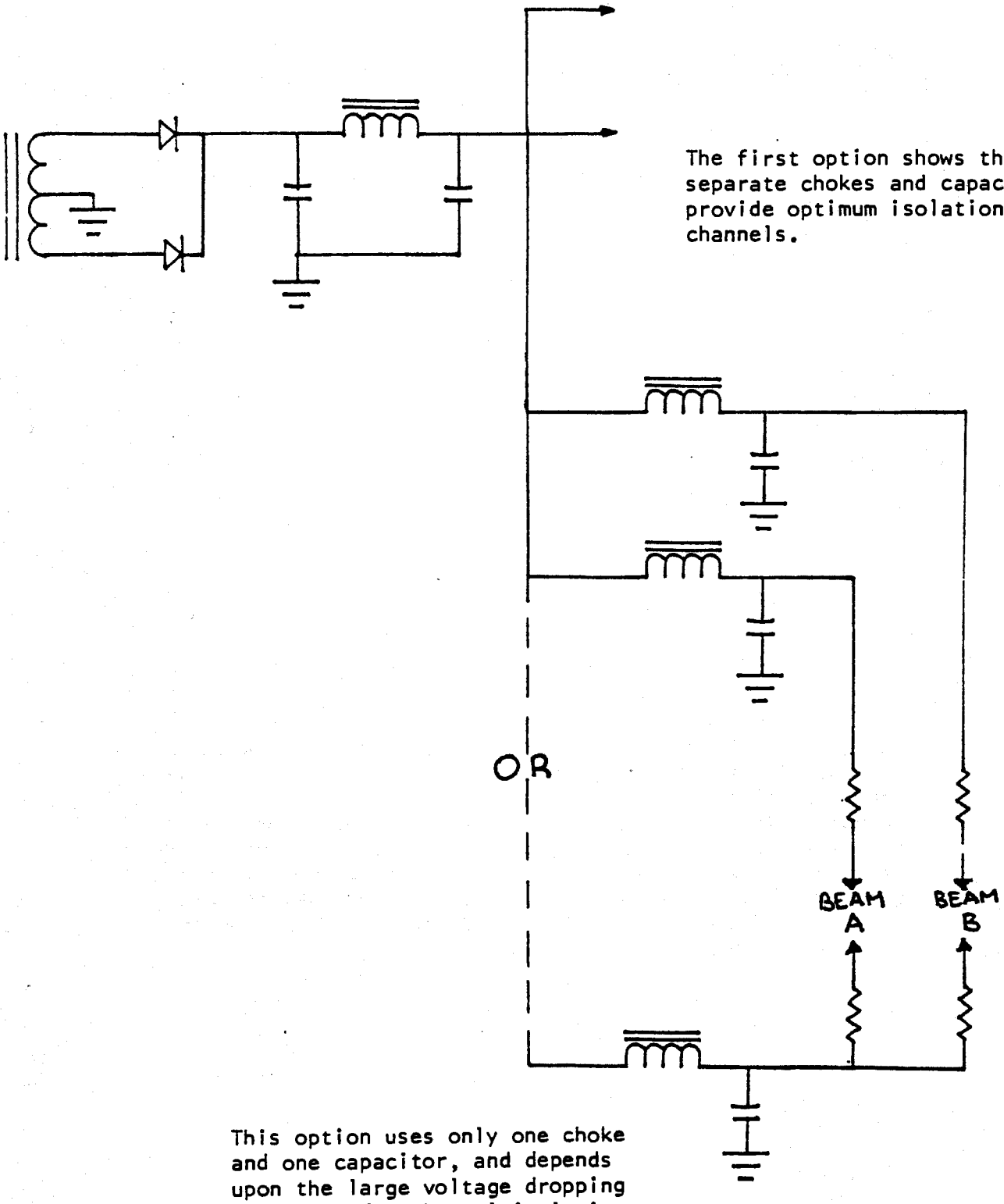

The first option shows the use of separate chokes and capacitors to provide optimum isolation of the two channels.

This option uses only one choke and one capacitor, and depends upon the large voltage dropping resistors for channel isolation.

Figure 31

STRAIN GAUGE POWER SUPPLY: ONE CHANNEL SHOWN

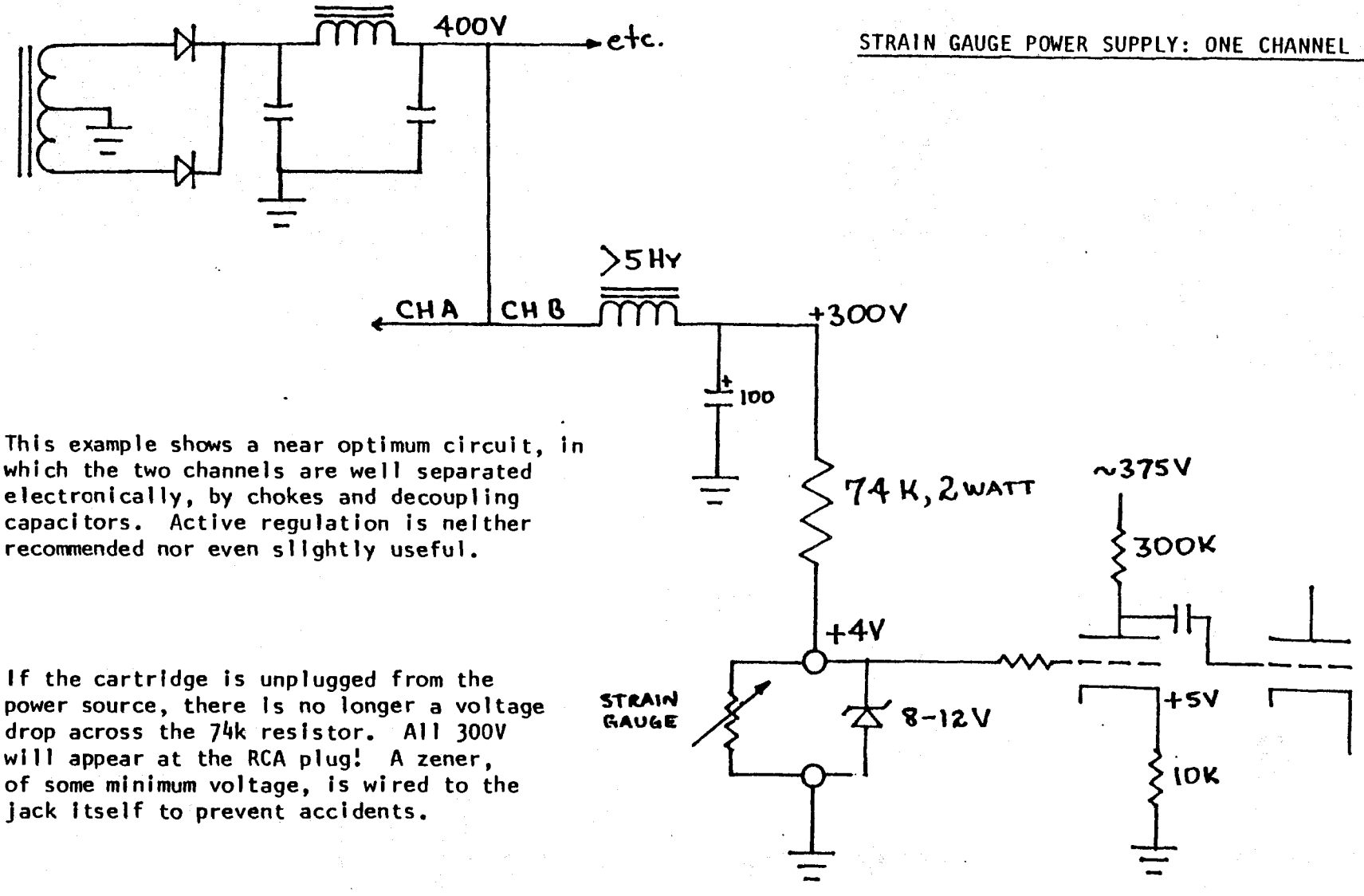

This example shows a near optimum circuit, in which the two channels are well separated electronically, by chokes and decoupling capacitors. Active regulation is neither recommended nor even slightly useful.

If the cartridge is unplugged from the power source, there is no longer a voltage drop across the 74k resistor. All 300V will appear at the RCA plug! A zener, of some minimum voltage, is wired to the jack itself to prevent accidents.

In this example, the cartridge is directly coupled to the grid of the first stage. Since the voltage across the beam is about a positive four, with respect to ground, the cathode must be raised to about five volts to ensure the correct cathode-grid voltage relationship. The purist will reduce the size of the plate load resistor to 292k, in order to maintain the same operating condition of the tube as with magnetic cartridges.

Figure 32

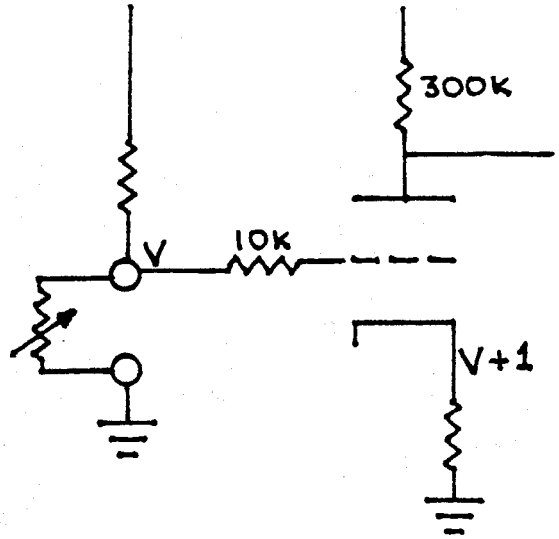

This further shows the requirement for careful selection of the cathode resistor of the first stage, if the strain gauge is to be direct coupled to the grid. Just ensure that the grid voltage is one volt less than the cathode voltage, when both are measured with respect to ground.

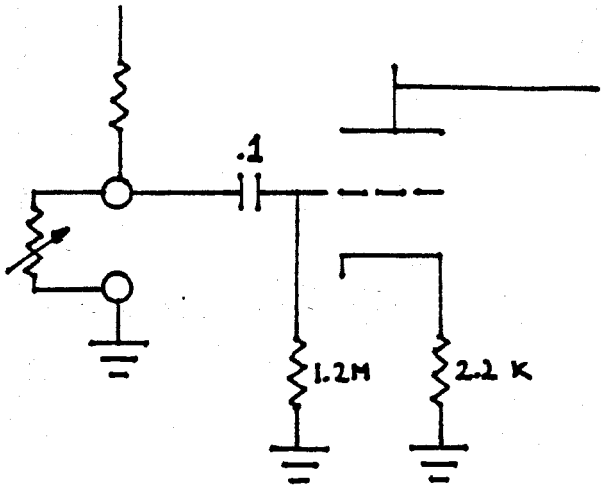

Introducing the beam to the grid through a capacitor is a quite satisfactory arrangeme which permits use of the original cathode resistor.

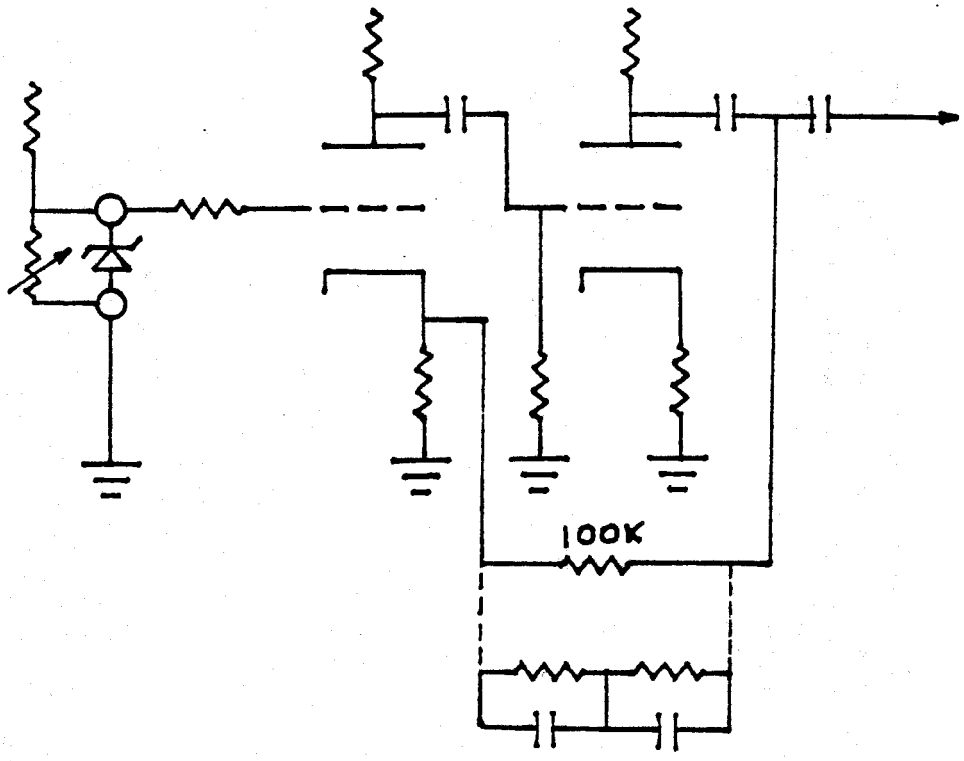

The complete circuit should prove to be extremely quiet, with remarkable dynamic range, and excellent sonic characteristics. The feedback loop, of course, must change. Remove all components of the original RIAA circuit, substituting a resistor of the largest value possible. 100k has worked well in many circui but experimentation is recommended since sound qualit seems to vary considerably wit changes in feedback. Any high frequency instability or harsh ness can be solved with the addition of the smallest possi capacitor in parallel with the feedback resistor.

Figure 33

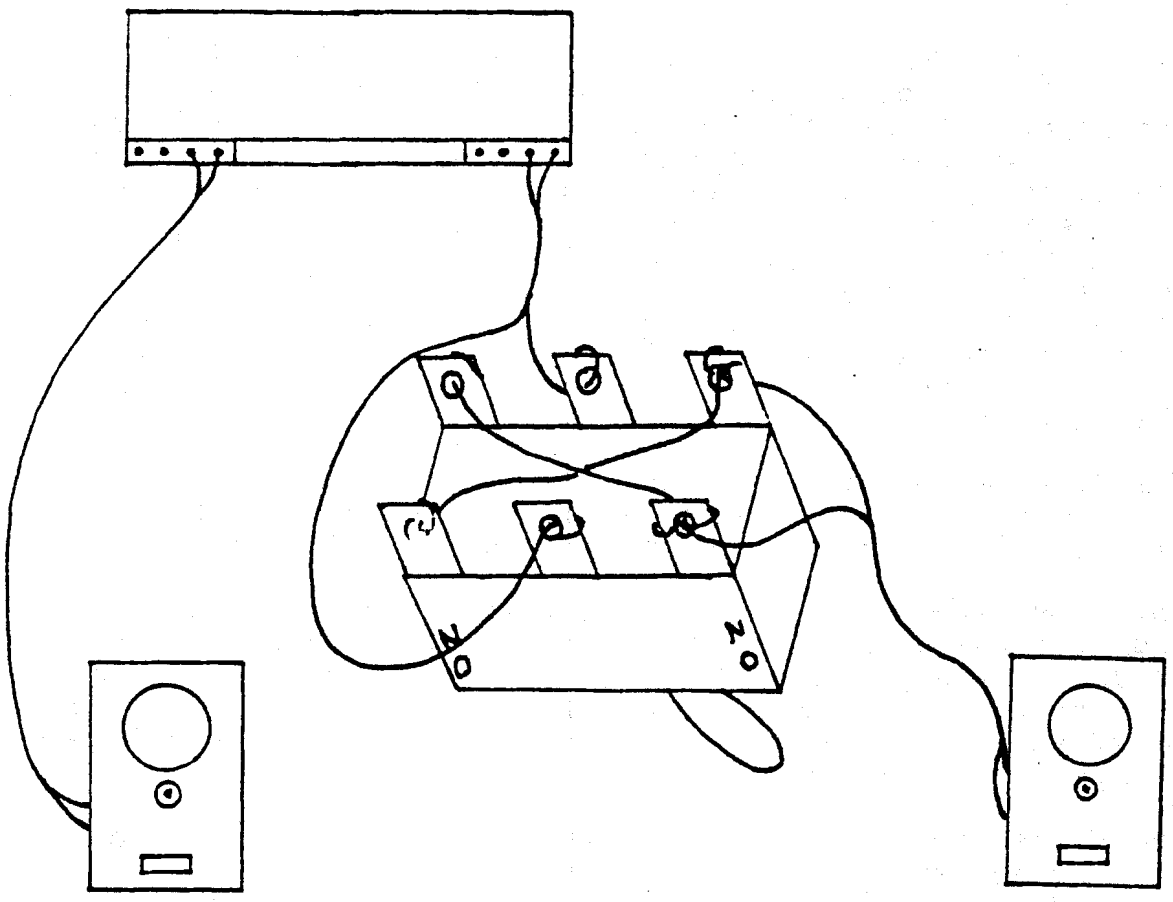

Since the beam configuration and geometry of a strain gauge cartridge produces two signals of which one is necessarily out of phase with respect to the other, it is necessary to either add one stage of amplification (and phase inversion) to one of the channels or to reverse the wires to one of the speakers.

If it is necessary to produce tape recordings, obviously the phase correction must take place in the preamplifier. On the other hand, if no such requirement exists, it is possible to avoid the complications of another stage by using the switch suggested by the sketch above. Mount the switch in a convenient location, either on the power amplifier or near the preamplifier itself. Wire it as shown. When the vacuum tube strain gauge system is to be used, flip the switch to correct the phase problem.

One major advantage of this system is that the signal is passing through all electronics 'out of phase'; this is an excellent technique for improving transient response and reducing the load on the power supply, particularly in the power amplification stage.

Figure 34

the associated preamplifier circuitry must be changed. A conventional feedback loop replaces the RIAA circuit, though the remainder of the voltage amplifier remains virtually unchanged. Once the current source is installed, conversion of the circuit is quite simple, once one basic decision is made. The voltage fluctuations can be coupled to the grid in two ways; through a capacitor or directly. A 0.1 mfd 100V capacitor will work well, but a purist will prefer direct coupling. That technique dictates a change in the cathode resistor of the first stage, since it is mandatory that the grid be placed at a slightly negative potential with regard to the cathode.

If the DC voltage across the beam is to appear at the grid, then the cathode voltage must be raised. Figure 33 shows the two coupling options and the voltage relationships.

Use of this circuit imposes one additional burden on the audiophile; phase control. By virtue of the geometry of the cartridge, the signals will be out of phase regardless of how it is wired. To correct this problem, two techniques may be used; wiring one speaker out of phase or adding a phase inverter stage to one channel.

If the former solution is chosen, a simple switch at the amplifier or speaker will reverse phase when discs are to be played. Figure 34 shows the wiring of that switch. Several cautions are required. First, it is likely that the current flow through the beams will equal or exceed the total high voltage current flow of the entire preamplifier; it is essential that the transformer be able to provide that current without damage. Also, the use of zener diodes to protect against high voltage in the cables or input jacks is mandatory. Last, the voltage across the beams (when the cartridge is plugged in) and the DC resistance of the beams are the only factors required in computing current flow through the beams. Excessive current flow will rapidly "cook" the cartridge, rendering it useless.

There is one alternative approach, that of placing the beam in series with the cathode of the first stage of the preamplifier. The more experienced technician might choose to experiment with this technique, which is potentially better but more complex. One immediate advantage is the elimination of the current source dropping resistors. To do this job, it is necessary to select a tube which will work well with about 4 ma current flow, which implies a cathode at about 4V above the grid if the beam has a nominal resistance of 1000 ohms. Of course, a voltage dividing series pair of resistors can be used from cathode to ground, with the beam acting as one of them and the grid tied to the junction of the two. Again, a zener is recommended as is an utterly "pure," well decoupled, B+ source for that tube.

MOVING COIL SUBPREAMP

The average moving coil cartridge produces only about 0.35 mv output, which is hardly sufficient to drive a conventional preamplifier stage. Until recently, it was necessary to use a transformer or solid state head amp to boost the voltage to an acceptable level. Unfortunately, transformers act, to varying degrees, as compressors and tend to limit dynamic range. Further, they are very susceptible to hum. Head amps, on the other hand, are capable of rather good dynamic range but inject that "transistor sound" early in the audio chain. Also, the input overload limits of some head amps can become a critical factor with relatively high output moving coil cartridges.

Until now, the vacuum tube head amp has been considered impractical or impossible, simply because the signal level (0.35 mv) is not far above the noise level of most vacuum tube attempts. Use of a variant of the series balanced DC amplifier, however, permits achievement of gain figures nearly equal to pentode performance without the partition noise which plagues those five element tubes. Adaptation of the series balanced DC amplifier to the moving coil cartridge problem is shown in Figure 35.

Use of this circuit imposes a number of problems which raises the complexity of the project to a level appropriate for a very experienced builder with considerable technical ability. The circuit must be carefully laid out to prevent two stages at the same operating point in the same tube. This demands that four tubes be used; four halves of four separate 12AX7s. To reduce noise and improve stability, the filaments are wired to high voltage taps. The heater supply must be DC and stable as a rock; at least 50,000 mfd is recommended in the heater supply, along with suitable chokes, or an automobile battery can be used.

Though frequency response and distortion figures remain excellent with normal grid bias, Figure 35 shows a means by which the grid can be biased with an external battery. This tends to change the "character" of the sound somewhat. R_1 is selected to equal the nominal impedance of the cartridge. At very low signal levels, ground loops become a serious problem; a single point ground is recommended, and experimentation may become necessary.

THE VACUUM TUBE SUB-PREAMPLIFIER

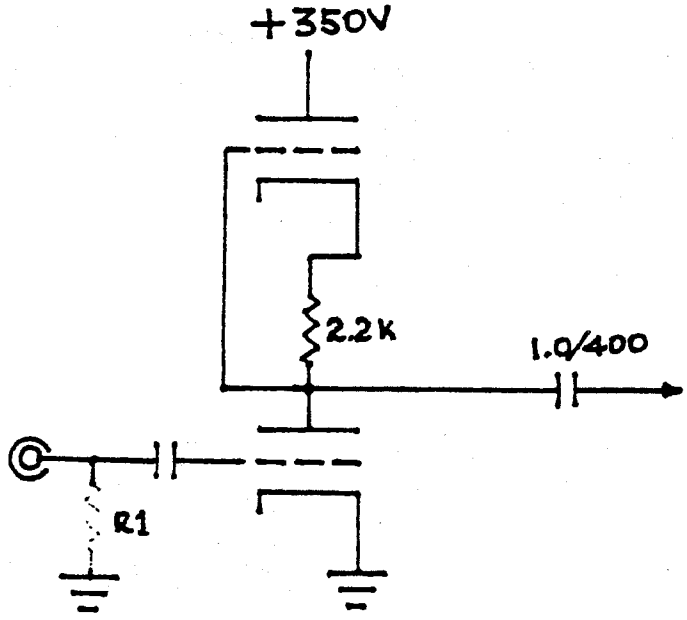

R_1 is the load recommended by the cartridge manufacturer.

This circuit is an adaptation of a DC amplifier used more than thirty years ago in instrumentation. The addition of a coupling capacitor eliminates its utility as a DC amplifier, but makes the circuit quite useful as a tube preamplifier for moving coil cartridges. The basic circuit looks like cascode, but it's not! Note that the grid of the second tube is wired to the plate of the first tube, and that a resistor appears between the first tube's plate and the second tube's cathode. The signal is taken from the plate of the first tube.

The circuit seems to have an unnecessary part - the second tube. At first glance, it appears to do nothing for the signal or the amplification process. After study, you may conclude that the second tube acts somewhat as a plate load resistor for the first tube.....

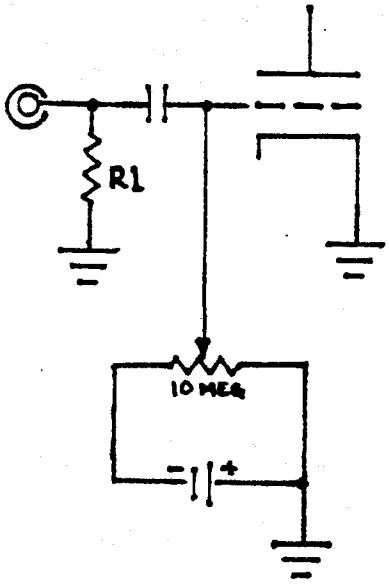

No bias resistor is used between the cathode and ground, so the input signal 'floats', seeking its own level. It is possible to vary the character of the output by using the battery circuit shown above to bias the grid. Frequency response and distortion remain constant, or nearly so, but sonic qualities seem to change.

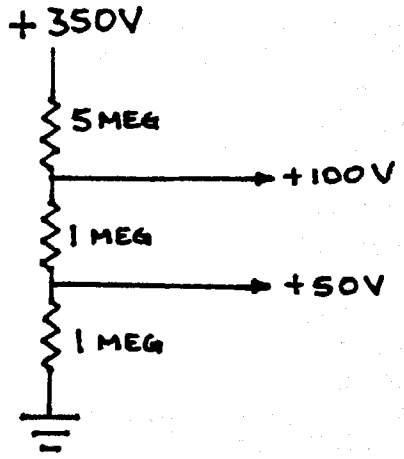

This voltage divider is used to provide bias to the filaments of the two stages, which must be fed nearly pure DC and, if all the rules are followed, must be fed from two separate DC sources!

Figure 35

chapter ten

power amplifiers

The vast majority of the principles and procedures already discussed apply to power amplifiers. Fortunately, amplifiers are (believe it or not) quite simple and, when broken down to a block diagram, they become a relatively uncomplicated piece of equipment. Figure 36 shows just such a breakdown.

The power supply, of course, supports every other element of the circuit and is the obvious first target of any modification proposal. As in preamplifiers, the object should be increased stability, separation, dependability, and the creation of a reservoir of energy on which the rest of the circuit can draw. The voltage amplifier is almost always the first stage to see the incoming signal from the preamplifier. That stage usually consists of a single tube, or part of a tube, though in some units more than one tube is used. The voltage amplification stage simply raises the amplitude of the incoming signal to a point where it is capable of driving the output tubes. Since all high fidelity vacuum tube amplifiers work in "push-pull," except for a new Japanese unit, it is necessary that the signal go through some sort of phase inverter, which sends two mirror image, but otherwise identical, signals to the output tubes. Many types of phase inverters have been developed, but the job remains the same; passage of the original signal and its mirror image to the output tubes.

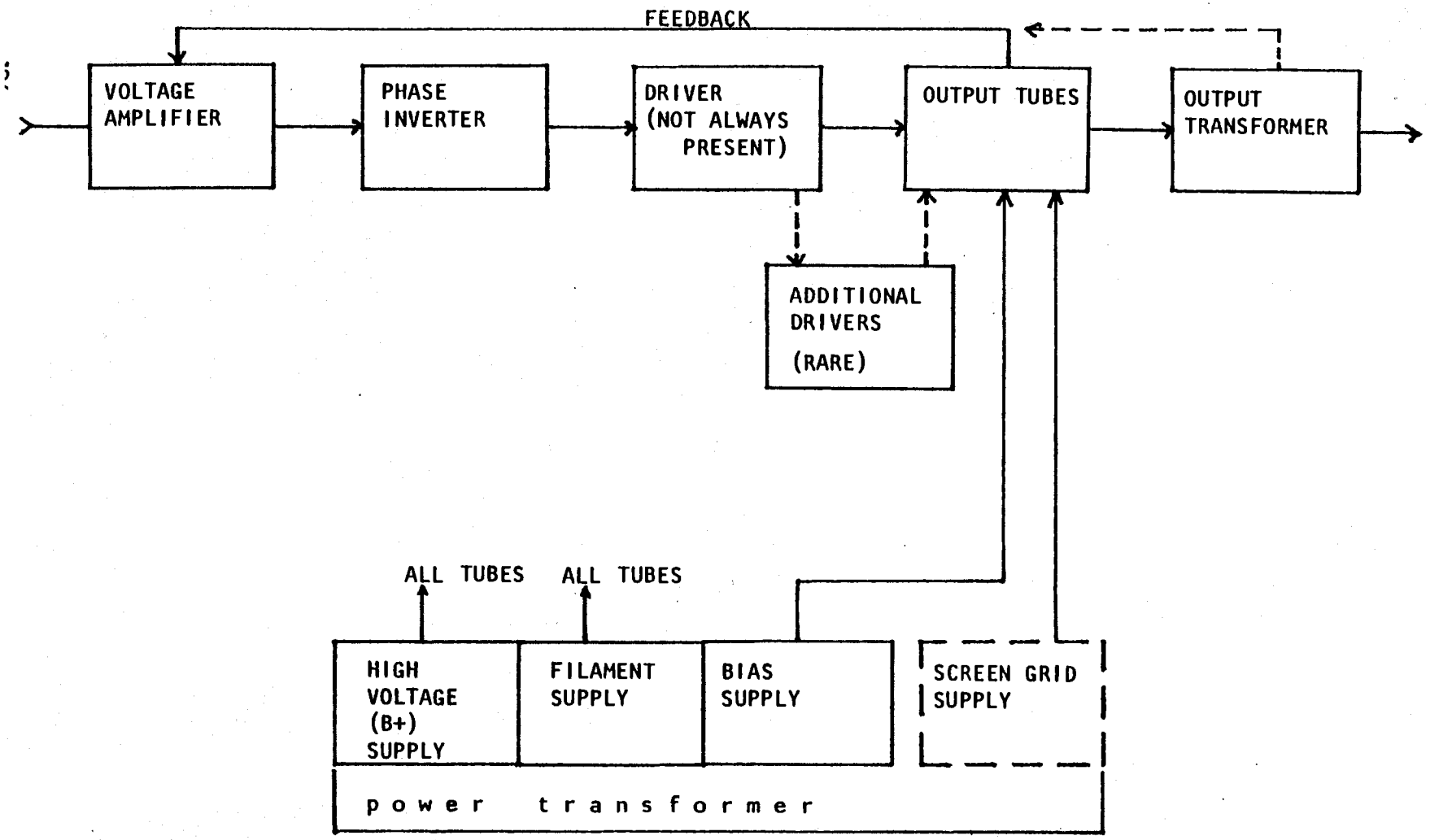

Modern designs incorporate relatively high gain tubes in the early stages, reducing or eliminating the requirement for drivers. Of course, the phase inverter can precede the voltage amplification stage. In some amplifiers, the phase inversion process also provides considerable gain.

Figure 36

Following that stage in some amplifiers is a driver stage, in which a further voltage amplification takes place. The output stage consists of two parts, the tubes and the transformer. The tubes amplify the signal considerably, and the transformer converts the high impedance output of the tubes to the low impedances required by speakers. Finally, one or two types of feedback are used from the output stage to an earlier stage, usually the first voltage amplifier, to reduce distortion and improve linearity.

Asides from these obvious elements of any power amplifier, there are "frills," such as a meter to permit accurate adjustment of bias, a fan for cooling, variable feedback or phase margin controls, volume controls, power output indicators, and more.

POWER SUPPLIES

The amplifier power supply is a bit more intricate than that of the preamplifier, yet the purpose remains the same; production of appropriate voltages at required current flow rates to support operation of the remainder of the circuit. More practically, the power supply provides the B+ for the tubes, a filament supply, and (peculiar to the amplifier), a bias supply. In some amplifiers there is even a separate screen grid voltage supply.

The filament circuit is, in virtually every case, quite straightforward, consisting of an alternating current at the rated filament voltage of the tubes. The plate supply, on the other hand, can be quite complex. It must be capable of delivering at least the maximum current conductable by all the tubes on the chassis under normal conditions. Further, the maximum required voltage can be quite high, which makes voltage drops (due to chokes and resistors in the circuit) critical.

Another cause of voltage losses is a faulty (leaking or high power factor) electrolytic capacitor, which can shunt a significant amount of energy to ground rather than to the tubes for which it is intended. This leakage increases current flow through chokes and resistors; any rise in current through any resistance means an increase in voltage drop across that resistance.

The goals of any modification proposal aimed at a power supply are stabilization of output at the optimum voltages, and creation of a larger reservoir of energy upon which the circuit can draw. Generally, these goals can be met without major changes to the concept of the power supply circuit, though active regulation is an excellent idea if the builder desires to produce his version of the "ultimate" amplifer.

Figure 37 shows a typical amplifier power supply circuit. The output of the power transformer is rectified, by tube or solid state diodes, and then meets a capacitor/choke/capacitor filter which smooths the DC. At that point, B+ energy is tapped for the output tubes.

Further downstream are resistors and filter (decoupling) capacitors which provide the voltages required by other portions of the circuit. The very first consideration is total capacitance of the system; an audible improvement is usually evident every time the capacitance is doubled, within practical limits. The very size of high voltage capacitors imposes major limitations, of course, but increasing system capacitance by a factor of three or four is usually not a problem. Chokes will normally remain as originally built, since no major improvement can be made without using a great deal of space; remember, the choke must be capable of handling a great deal of current (up to 400 milliamperes) with a minimum voltage drop.

If the DC resistance of the original choke is 40 ohms, then only 16 volts will be dropped across that choke. Another choke, twice the size, might have a DC resistance of only 20 ohms, which would drop about 8 volts. The 8-volt savings just is not significant in a circuit demanding a total of as much as 475V.

Since the original smoothing circuit is designed to provide the required current at a virtually ripple-free voltage, increasing the inductance of the choke will probably not produce a noticeable difference. Doubling or tripling the capacitors on either size of the choke, however, will (slightly) increase available voltage and make that voltage a good bit smoother than in the original circuit. If the original circuit is "choke input," voltage can be gained by adding a 10 mfd capacitor from rectifier output to ground.

Active regulation in the B+ circuit is a standard procedure on some of the finer amplifiers produced to date. Voltage regulator tubes can be used in conjunction with a series regulator tube, but this takes a great deal of space. Far more practical is the use of a simple solid state regulator, similar to that recommended for the preamplifer power supply, but capable of regulating the much higher current of an amplifier.

An even more simple shunt regulator can be used, as shown in Figure 38. To design that circuit, simply measure the actual voltage present (with the unit warmed up) at the point where regulation is to take place (immediately following the choke is the most appropriate spot). Build up a string of zener diodes whose voltages add up to a figure about 10V below the measured voltage at the desired point in the circuit. Each zener must have considerable power handling capability; five watts each is recommended. If the filter choke has relatively

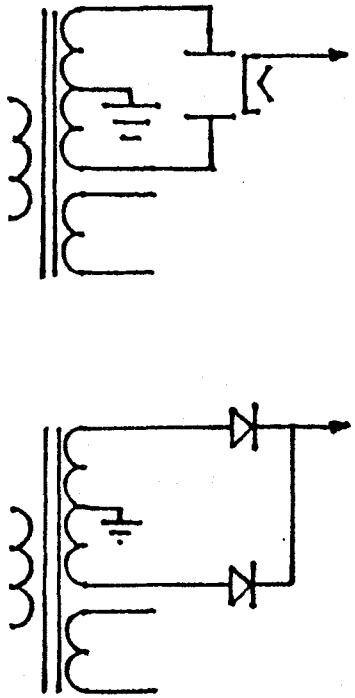

TYPE OF POWER TRANSFORMER AND RECTIFICATION IS UNIMPORTANT

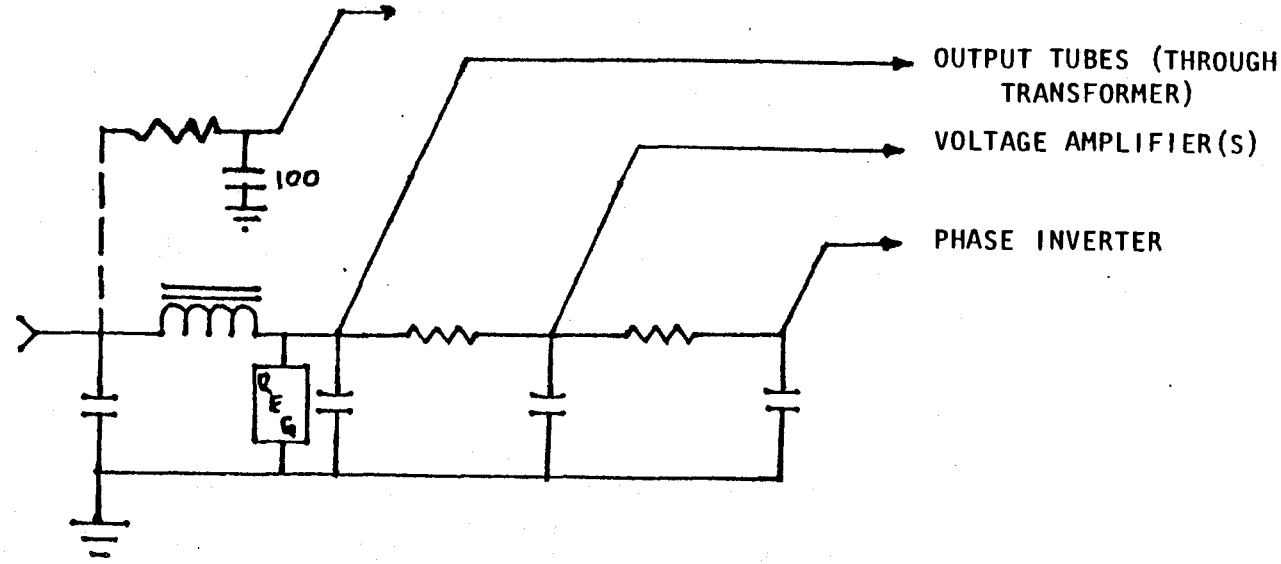

REGULATION MAY ALSO BE ADDED AT THE TAKE-OFF POINTS FOR THE VOLTAGE AMPLIFIER AND/OR PHASE INVERTER. ALSO, IT IS OFTEN USEFUL TO REPLACE THE RESISTORS SHOWN ABOVE WITH CHOKES, IN ORDER TO INCREASE THE VOLTAGE AVAILABLE.

THE DOTTED LINE SHOWS THE RECOMMENDED VOLTAGE TAKE-OFF POINT FOR A SEPARATE SCREEN GRID POWER SUPPLY. IN THOSE CIRCUITS WHERE SCREEN GRID CURRENT FLOW IS EXTREMELY LOW, A BLEEDER RESISTOR CAN BE USED TO STABILIZE VOLTAGE DROP ACROSS THE CHOKE OR RESISTOR.

Figure 37

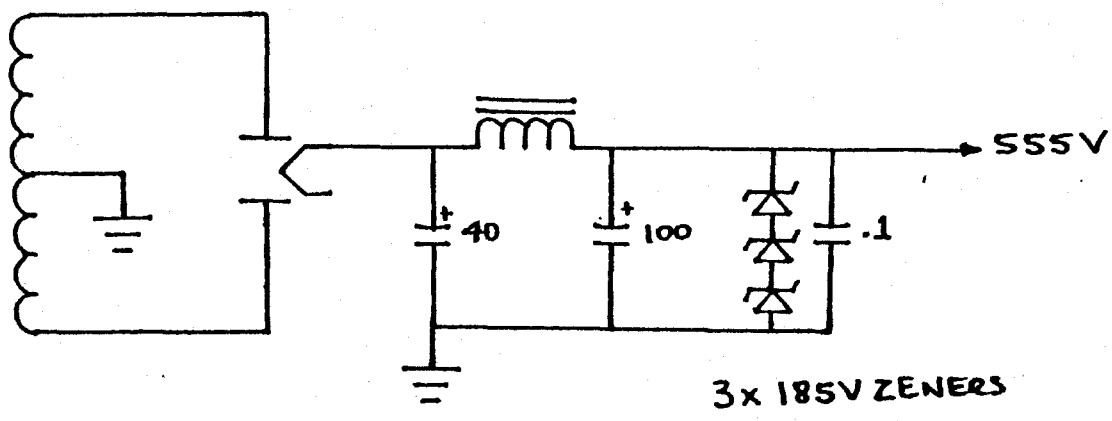

The argument regarding regulation continues. Active regulation, such as the shunt regulator shown above, can be excellent when the conventional filter circuit is inadequate. On the other hand, the filter circuit can be made 'adequate' with the addition of sufficient capacitance and the use of really massive chokes. Active regulation circuitry is no substitute for a properly designed basic power supply, though even a shunt regulator can be a very great aid to a circuit in which the original power supply is inadequate.

Figure 38

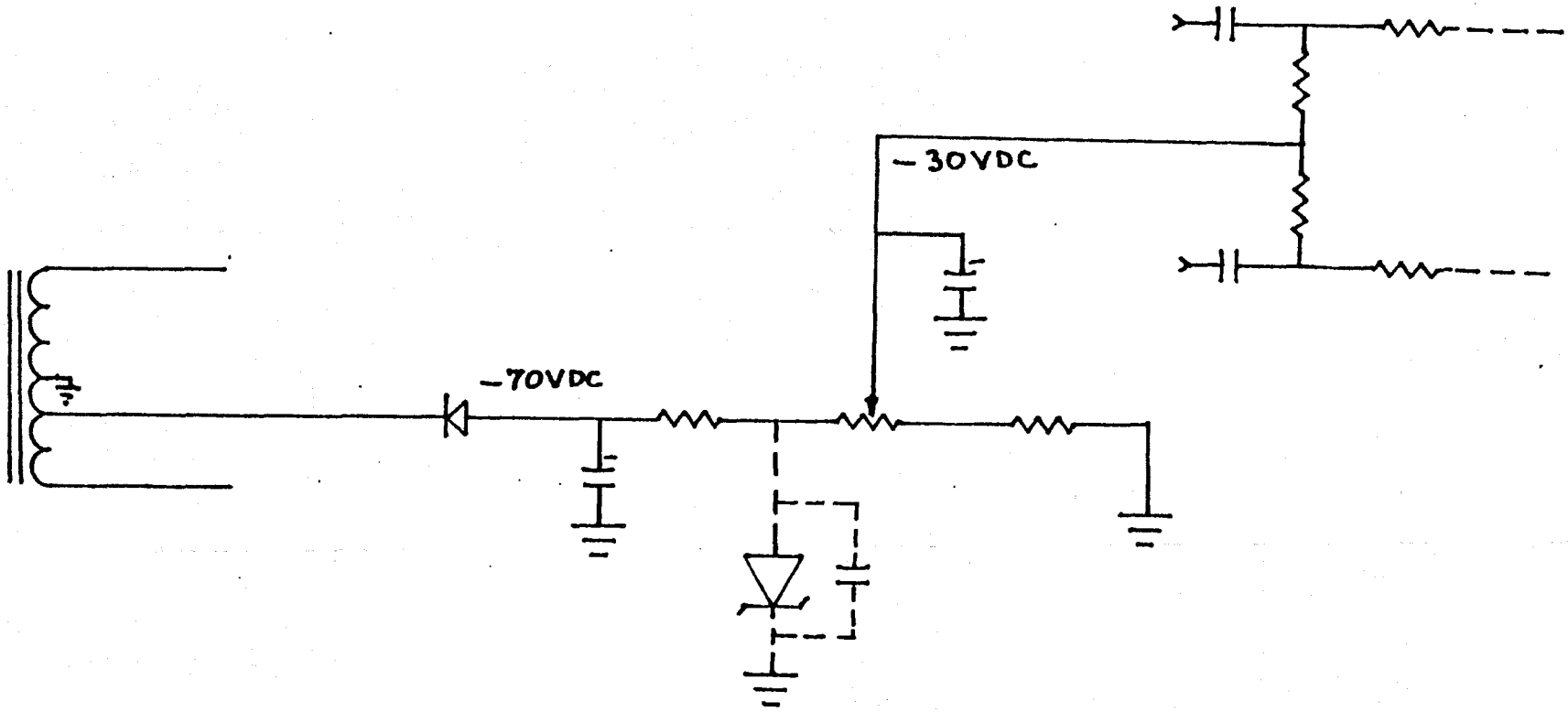

This is a typical bias supply. It begins with a tap on the high voltage winding, goes through a rectifier ('backwards', because it is negative bias), is filtered and placed across a potentiometer. The wiper of the pot is wired to the junction of a pair of matched resistors, each of which is connected to the grid (through some small resistor, usually 1k). The requirement for that negative bias varies, depending upon the type of output tube used and the class of amplifier operation. For a given tube, the lower the bias the more likely it will be to operate Class A. That is, if only a slight negative bias voltage appears on the grid of the output tube, there will be a great deal of current flow. If that idle current is within the limits of the tube, and the power supply can provide it without saturating, then the tube will operate Class A more often than with the correct (specified) bias voltage. As negative bias increases, current flow drops, and the voltage across a resistor in the cathode circuit of the output tubes will decrease. As negative bias is reduced (made less negative), current flow rises.

The addition of a zener shunt regulator in the bias circuit is recommended to ensure stability. The very low current flow through this circuit makes it possible to acquire that stability with large (above 500 mfd) capacitors in the filter circuits.... but note that polarity is reversed when compared to other filter circuits.

low resistance (below 20 ohms), add a 5 or 10 ohm 20 watt resistor in series with it.

Finally, add a 0.1/600V mylar capacitor in parallel with the zener string, in order to shunt any transients. That capacitor is advised because "sharp" voltage changes may not be shunted by the electrolytics, which--to a limited degree--can act as inductors.

This shunt regulator will permit slightly improved power supply functioning, though it is not quite as effective as the more complex series regulator.

A similar regulator can be added at any point in the circuit where voltage stability is important; such points include each B+ tap, the bias supply, and any separate screen grid power supply.

OUTPUT TUBE BIAS

The bias supply is of critical importance; voltage must be utterly stable, as the output tube has no way of knowing the difference between an audio signal and a fluctuation in bias supply. Both will be amplified and heard through the speakers. In order to stabilize the bias supply, most circuits use electrolytic capacitors and resistors. Replacement of one or more of the resistors with a high-inductance choke will help, but an easier solution is the addition of large capacitors. The purist will seek the small improvement gained by actively regulating the bias supply. Figure 39 shows a typical bias supply; the wiper of the potentiometer goes to a point between two matched, high-value resistors between the grids of the two output tubes, thus adding the selected negative bias voltage to the audio signal. Optimal location of the shunt regulator is shown; it should also be paralleled with a mylar capacitor in order to eliminate any transient effects.

A further improvement of the bias supply is possible; additional potentiometers can be added to permit separate adjustment of current flow through each tube. In such cases, two requirements must be met; space for the additional potentiometers and a means of measuring the current flow through each of the output tubes. Figure 40 shows such a circuit, which includes separate bias, large filter capacitors, a shunt regulator, and a phone jack in the cathode circuit of each of the tubes. To adjust such a circuit, simply insert a phone plug (wired to an ammeter, of course) into the jack--this breaks the circuit and runs the current through the meter, permitting accurate adjustment. Construction of such a circuit is advisable, since it will reduce the cost of tubes as well as improve overall performance.

When a circuit is designed with a common bias pot, the designer assumes that the output tubes will be matched. That is, at a

given bias voltage, with no signal present, the two tubes will have identical current flow (from cathode to plate). Hopefully, the tubes will be so carefully matched that current flow will be identical regardless of frequency or level of applied identical signals.

Since matched output tubes are difficult to buy, some manufacturers have included a means of biasing the output tubes separately, claiming that this obviates the necessity for matched tubes. To a major degree, this is true, but it assumes that conductivity of a tube does not vary with frequency, which is not always the case. Regardless of the number of bias control potentiometers, a look at Figure 41 will indicate how output tube grid bias is changed by adjusting the potentiometers to produce the desired current flow through either one tube at a time or one pair at a time. It is necessary to refer to the instructions for a given amplifier to determine the originally specified idle current, but for the most commonly encountered output tube, the 6CA7/EL34, about 50 milliamperes per tube is correct.

Any great increase in this figure will reduce tube life, but may improve performance; another trade-off. The EL34, for instance, runs very well with only a slight reduction in life expectancy when current flow is raised to about 55-58 milliamperes. In the Stereo 70, this equates to about 1.8V measured from the bias check point to ground, since that amplifier uses a 15.6 ohm resistor between the cathodes of the output tubes and ground, and any voltage developed across that resistor can be used to calculate current flow, using the equation $I = E/R$, or current equals voltage divided by resistance.

Since many amplifiers use the same resistor between the two cathodes and ground, it is necessary to compute current flow for the pair of tubes. One solution is the addition of a test jack between the cathode and ground of each tube, as shown in Figure 40.

Also, the lower the negative bias the higher the idle current and the greater the percentage of Class A operation.

SCREEN GRID SUPPLY

In a pentode circuit, the screen grid of the output tubes must be placed at a relatively high voltage; this voltage, about that present at the plate, is usually taken from the output transformer primary winding, as shown on Figure 42.

The screen tap points are approximately 20% from the center tap. Stabilizing this voltage always improves performance; some units (Paoli for instance) use a completely separate screen grid power supply. Such a supply can be regulated with either tubes or solid state devices. Figure 43 shows an example of

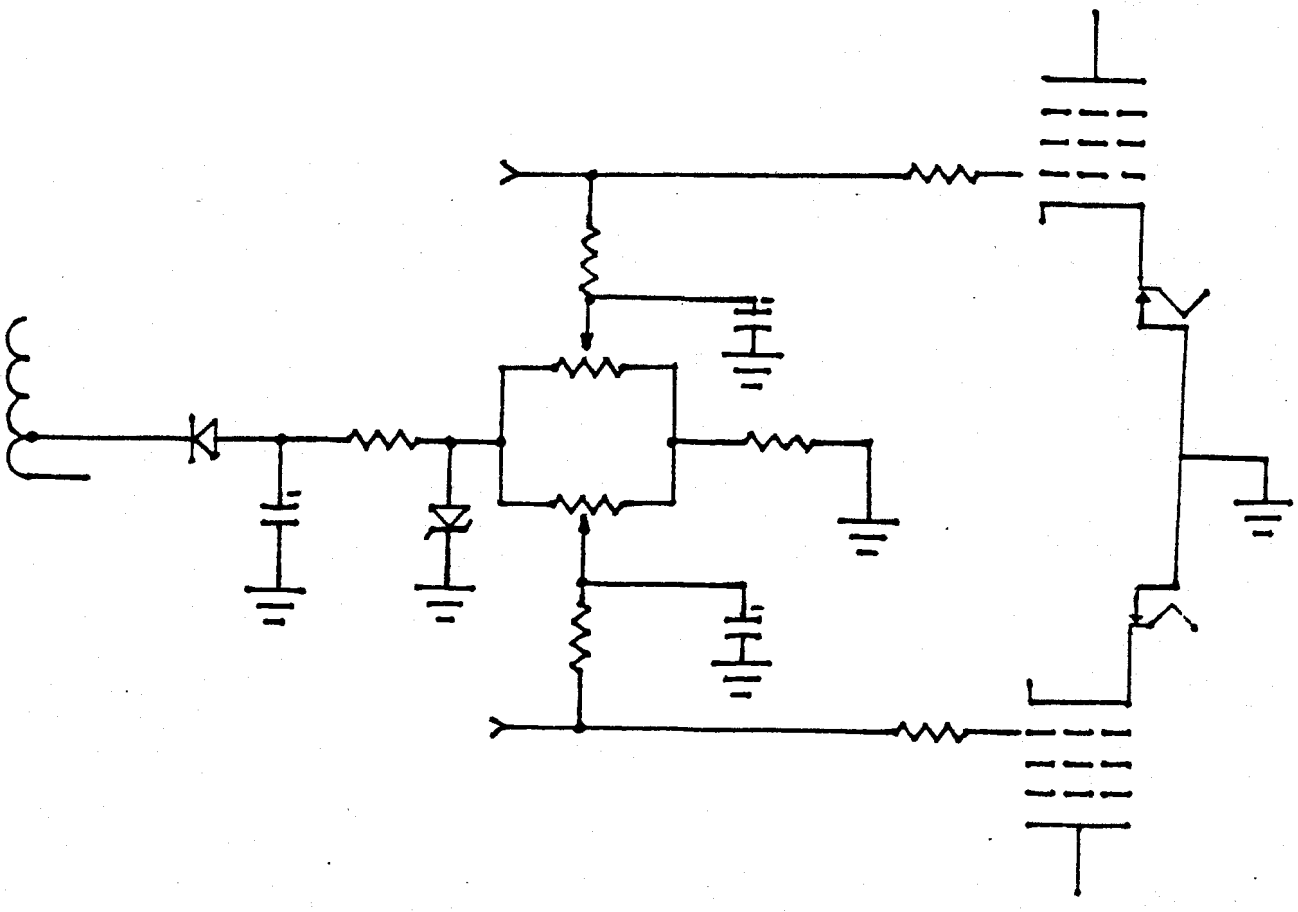

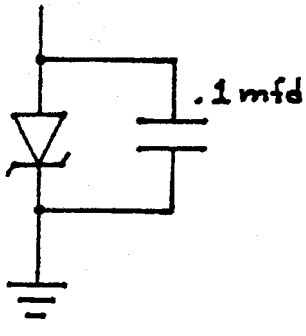

This is an excellent but unimaginative circuit for providing bias to the output tubes. Because each tube is biased separately, it is possible to use unmatched tubes. The electrolytic filter capacitors should be as large as can be physically placed in the space available. A zener shunt regulator can be added, but the zener should definitely be bypassed with a small capacitor to shunt transients to ground. Note that the polarity of the zener is reversed when compared to the B+ circuit. The banded end goes to ground.

The biggest problem with the circuit shown above is finding physical space for the circuit components. The two potentiometers must be accessible without dismantling the amplifier. Select potentiometers with twice the resistance as the original (single) unit. The other resistor values remain the same.

Figure 40

This is one of many bias circuits frequently encountered. This particular schematic shows bias isolation resistors of 220k. In nearly every amplifier, the specific value of these resistors is not important as long as the correct bias voltage, on the grid, is attained. A change in the bias isolation resistor should make only a slight difference in the bias voltage. Though the specific value of these resistors is not critical, it is important that they be matched. The bias voltage must be exactly the same on the grids of the two output tubes, unless they are not matched and some means of separately biasing them is built into the circuit.

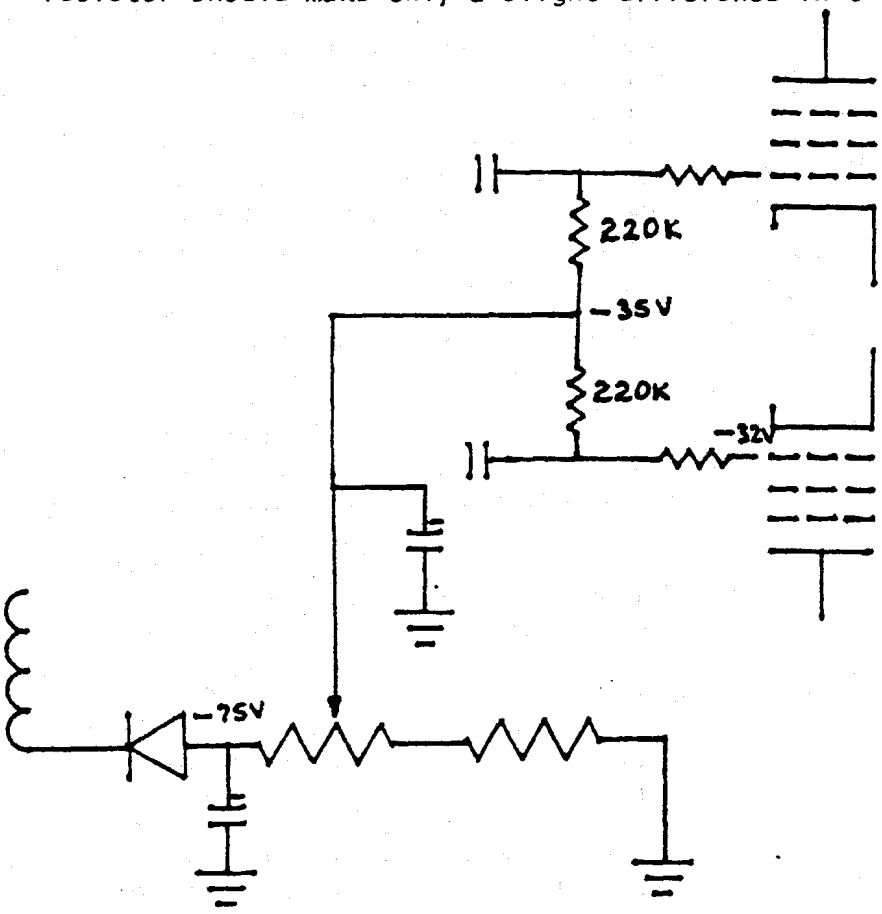

This is the simplest means of providing a DC balance control. It consists of a potentiometer in series with the two bias isolation resistors. The original bias control is used in conjunction with the new balance control to ensure that current flow is the same through each tube.

Obviously, it will be impossible to measure that current flow unless some provision is made for interrupting either the plate or cathode circuit.

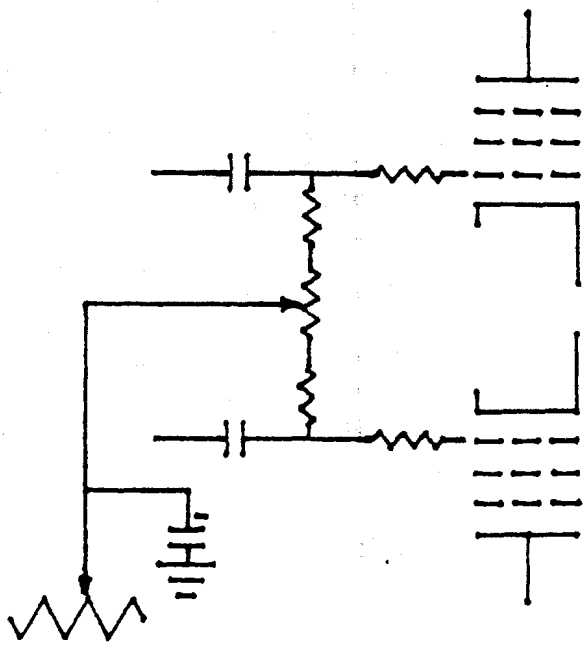

Figure 41

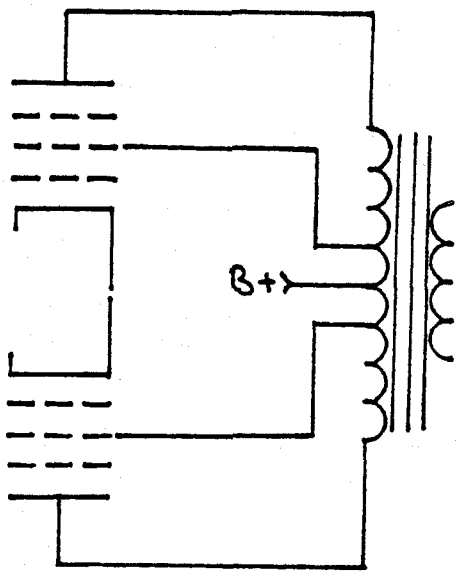

This is a typical ultralinear circuit, in which the screen grids receive the required voltage from taps on the primary winding of the output transformer. Note that as the control grid varies the current flow through the tube, the voltage drop across the primary will also vary, as will the actual voltage which appears on the plate. The purpose of the screen grid is to make current flow independent of plate voltage; the screen grid, in fact, takes the place of the plate in establishing the amount of current flowing at any given instant. The relationship between the control grid and the screen grid is, therefore, critical. The more stable the screen grid, the more accurately variations in voltage on the control grid can control tube current flow. While it is not possible to provide perfect stability of the screen grid voltage source unless a separate power supply is built, it is possible to provide an improvement by adding a small (100-200) ohm resistor (or a choke) in series with the screen grid.

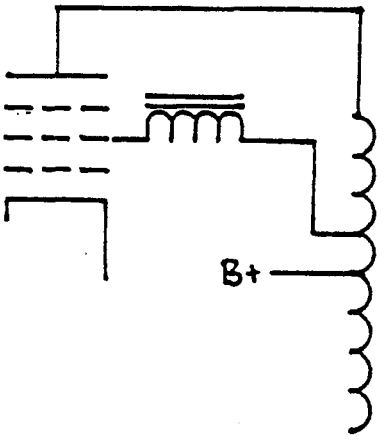

A serious modification would delete the screen grid taps on the output transformer, despite the advantage of degeneration across that portion of the primary winding. A separate tap on the power supply, with an appropriate choke and decoupling capacitor, plus a dropping resistor to keep screen grid voltage within limits, is an excellent option.

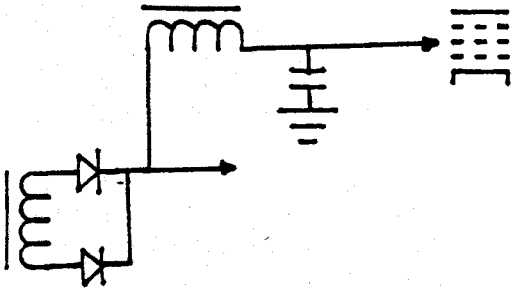

The object of these efforts is the improvement of screen grid voltage stability.

Figure 42

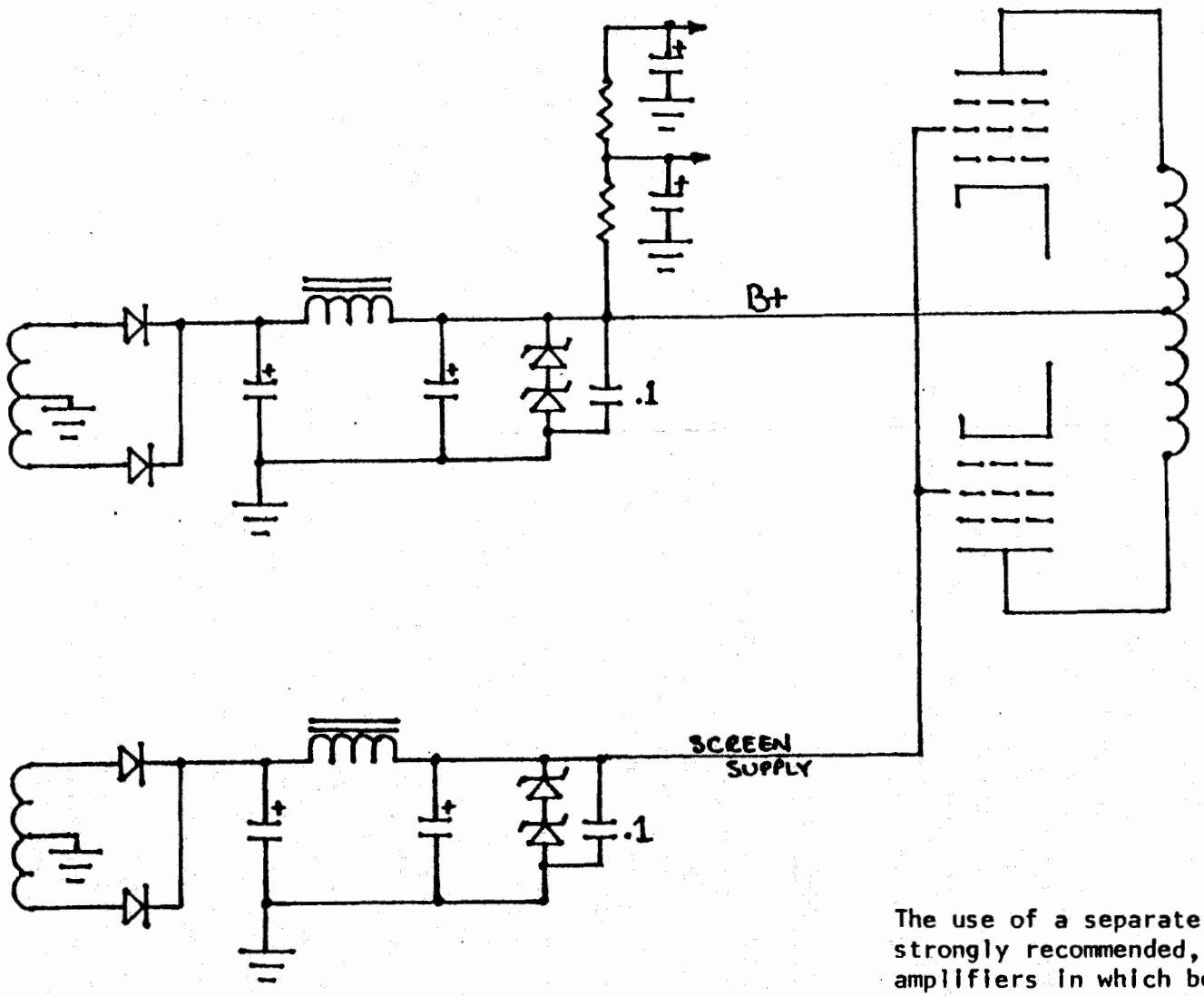

Figure 43

The use of a separate screen grid power supply is strongly recommended, particularly for those dual amplifiers in which both units can be supported by the same power supply. Since there is very little current flow, the entire assembly can be quite compact.

such a circuit. Basic required voltage can be derived from either a separate winding on the power transformer, or a separate transformer rated at the required voltage. Current flow is not much of a problem, as it should not exceed the limitations of any commercially available transformer. To determine the required voltage, check the schematic for the unit being modified.

The Stereo 70, Marantz 8b, and other dual amplifiers sharing a common power supply are particularly suited to construction of a jointly shared screen grid power supply. Such a circuit can be built on a separate chassis or, with considerably cramming, can sometimes be added to the original unit.

A compromise between the original installation and the optimum solution is the addition of components to the existing screen grid supply in order to stabilize it. For instance, one might add high inductance, low resistance, chokes in series, or even active regulation. In some cases these techniques will have an effect on the energy transfer characteristics of the output transformer, but where power is not an important factor, the result will be worth the sacrifice. In the ideal pentode circuit, the screen grid supply will be absolutely stable.

THE VOLTAGE AMPLIFIER

In most units the voltage amplifier precedes the phase inverter. Some amplifiers, however, invert phase first and then amplify. Still others employ one stage of voltage amplification, a phase inverter, and then a driver stage prior to the output tubes. Regardless of the sequence of circuit elements, the principles remain the same.

Any improvements to the circuitry of the voltage amplifier stage of a power amplifier should be aimed at improved linearity, lower distortion, greater stability, more headroom, and wider bandwidth. Most of these goals can be reached while retaining most of the original circuit values, simply by replacing components with others of closer tolerance and higher stability. It will become evident, as the proposals for the power amplifier are explained, that deletions will be required from the feedback loop. Some of these changes will dictate additions of small capacitors to the voltage amplifier stage, in order to ensure adequate phase margin and high frequency stability. The object is reduction of feedback to a minimum figure, with minor sacrifice in distortion or bandwidth.

Voltage amplifiers can be divided, generally, into two types; the pentode and the multiple triode. In many amplifiers, the high gain pentode is used because of its simplicity (only one stage is required) and economy. A better approach is the use

of two or more triode stages, which (in most cases) can provide the same degree of voltage amplification with less (or more tolerable) distortion.

Unfortunately, this option necessitates one or more extra tube sockets in the chassis, an additional (though slight) burden on the power supply, and a major redesign of the circuit. The advantages of the triode, however, may justify such an effort, particularly if the builder is seeking the "ultimate" modification. Since some of the finest amplifiers ever built include pentode amplification, obviously a pentode circuit can be designed to have excellent characteristics.

Figure 44 shows the conversion of the voltage amplifier stage from a pentode to triodes. Phase becomes an issue here, since each amplification stage inverts the signal. This problem is resolved by crossing the outputs of the phase inverter stage, which will be dealt with next. In improving the voltage amplifier, then, it is necessary to replace the original components with those of better stability, reliability, and tolerance. The improvements to the power supply alone will do wonders for the voltage amplification stage even if no other steps are taken.

In many amplifiers, the voltage amplifier stage is directly coupled to the phase inverter stage; that is, the plate of the voltage amp tube is connected directly to the grid of the phase inverter. In other amplifiers, there is intervening circuitry. In any case, the feedback loop should return a portion of the output signal to the first stage of amplification, thus cancelling out any deviations and reducing apparent amplitude of the input signal. Feedback should be kept at a minimum, of course, as explained elsewhere, and capacitors should be eliminated from the feedback loop. High frequency stability can be re-established through use of small capacitors strategically placed in or between the voltage amplifier and the phase inverter.

Headroom in the voltage amplifier stage can be defined as the permissible voltage swing of the incoming signal before the stage clips. Some tubes have more room than others, of course, but the general rule is to increase headroom by increasing the voltage difference between the grid and the cathode.

Virtually all amplifiers use a grid leak resistor between grid and ground, and the lack of current flow places the grid at ground potential. To increase the voltage difference between grid and cathode, then it is only necessary to raise the voltage at the cathode. IF THE TUBE CHARACTERISTICS PERMIT OPERATION AT A HIGHER BIAS WITHOUT ENTERING A NONLINEAR PORTION OF THE CURVE, increase bias by adding resistance between cathode and ground. Current flow through the resistance creates a voltage drop which self-biases the cathode with respect to grid and ground.

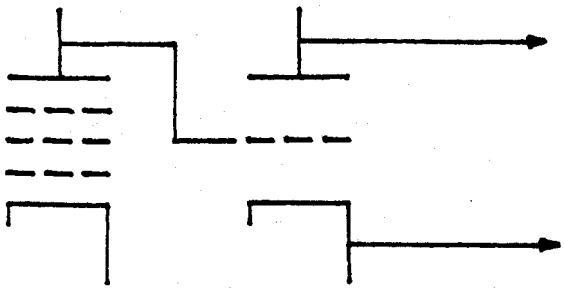

This is a typical pentode voltage amplifier followed by a triode phase inverter. The gain produced by a pentode is significantly higher than that available from conventional triodes, yet the purist is offended at the presence of any pentode in the amplifier chain. It is always possible to replace a pentode with two or more triodes, but phase can become a problem unless an odd number of triodes are used.

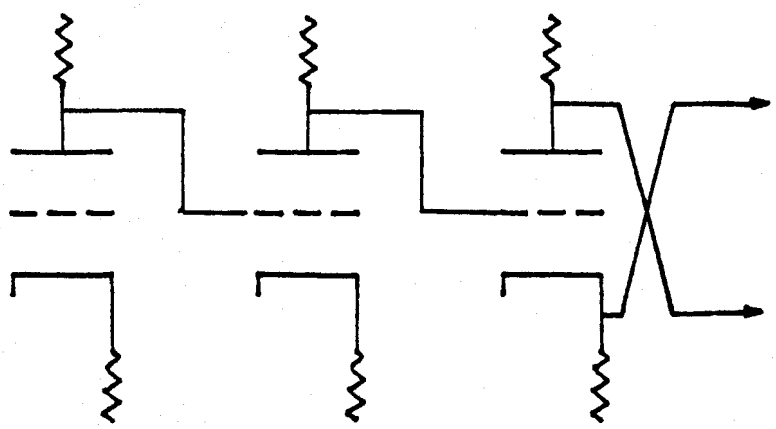

This shows the use of two triodes as voltage amplifiers and one triode as a phase inverter, all direct coupled. Such a circuit implies a high voltage source with at least 450V available, though current flow will be small. In order to convert from pentode to triode, it is recommended that direct coupling be used - this dictates a change to the power supply in which the voltage for the triode chain is tapped from the output tube supply point, and then decoupled. Note the phase reversal, solved by 'swapping' the outputs of the phase inverter.

Figure 44

If one chooses not to become emmired in tube characteristics graphs, it is possible to make a minor change without fear of increasing distortion. If the original cathode resistance totals 1000 ohms, it can be safely increased by 20%. If the cathode resistance is split between two resistors in series, with feedback entering the circuit at the junction of the two, simply increase the larger of the two resistors (between feedback and cathode). This will also serve to decrease feedback somewhat, which is another worthwhile goal as long as performance does not suffer.

Once the signal leaves the voltage amplifier, it must be processed to meet the requirements of the power amplifier stage, which requires (since the output tubes are in "push-pull") that the signal be delivered in its original form and in an inverted form as well. Further, it is mandatory that the signal, and its mirror-image, be absolutely identical except for phase; that is, one of the signals must be upside-down with respect to the other, but no other changes are acceptable. Some old amplifiers used transformers, but virtually all modern (post-1950) units use tubes.

The phase inverter stage is critical in only a few respects, including fidelity (of course!) and AC balance. That term refers to the requirement that, in amplitude, the signals leaving this stage are identical. Because this criteria is so important, some amplifiers permit adjustment of AC balance, usually by means of a potentiometer in the cathode or plate circuit of the phase inverter tube(s). That potentiometer corrects any imbalance by attenuating or amplifying one of the two signals, in order to match it to the other.

In those amplifiers lacking such a control, it is recommended that it be inserted as a partial replacement for the resistor in the cathode circuit, as in Figure 45. Such amplifiers usually use a triode as a phase inverter, with the signal taken from both the plate and cathode and then fed to the output stage. The resistors at those two points are, in the original circuit, matched. If the original values are, say, 47,000 ohms, a good choice for replacement might be a 43,000 ohm resistor plus a 5,000 ohm potentiometer. This will permit a considerable range of adjustment. A very few amplifiers include circuitry suitable for measuring (on a meter, perhaps) A-C balance, and then adjusting such a potentiometer to make necessary corrections. Marantz amplifiers, for instance, have this capability.

Other changes which can be made to the phase inverter include stabilization (power supply and precision components) and optimization of values. That is, metal film resistors can be used to reduce noise and ensure stability despite temperature changes, and the values could be modified to optimize tube performance.

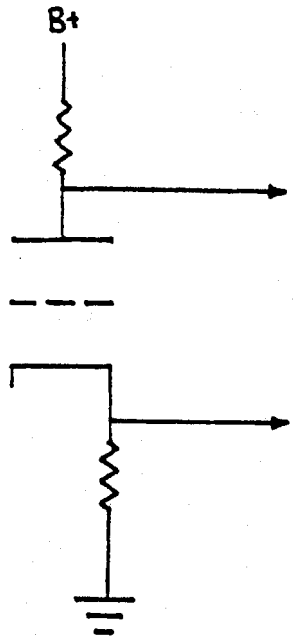

The conventional triode phase inverter has no provision for adjusting the output at the cathode and plate, with respect to one another. If AC balance shifts, distortion will increase significantly.

Though virtually all amplifiers use matched resistors at the two points indicated, carbon composition resistors are used. The instability of such resistors, with time and varying temperatures, is unsatisfactory.

Replacement of these resistors with carefully matched metal film units of the appropriate value will improve AC balance, both immediately and over the long run as well.

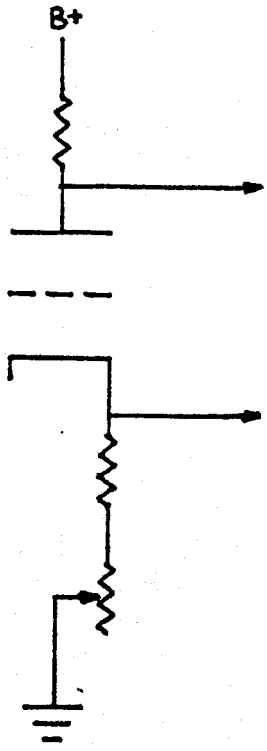

Addition of a small potentiometer in series with the cathode resistor of the phase inverter will permit adjustment of the AC balance. It is necessary to first reduce the value of the fixed resistor by approximately half the resistance of the potentiometer.

This is the solution to the AC balance problem.... it works extremely well and, if high quality parts are used, will stay adjusted for years. As tube wear affects balance, it can be re-adjusted.

The easy way to check for AC balance is to first carefully adjust DC balance of the output tubes, then add a constant signal (60 Hz) and check for a difference in AC current flow through the output tubes, using the same jacks as were used for checking DC balance.

Figure 45

This latter change requires a careful analysis of the circuit, by means, perhaps, of Electronic Circuit Analysis Program (ECAP), to determine the precise value called for in every case. This procedure is time consuming and generally academic, since one must then search through every possible source for resistors of the precise values called for. Most circuit designers are directed to produce a circuit which calls for industry standard values, and it is rare that a significant difference will exist between the calculated, optimum value and the value actually used, unless headroom is the critical factor.

Ultimately, the signal will leave the phase inverter in original and inverted form. The next step is (sometimes) further amplification, by the "drivers." If the original voltage amplification was too low to drive the output tubes, and insufficient additional amplification (if any) was provided by the phase inverter, then at least one further stage of voltage amplification will be required. There are very few amplifiers using this additional stage. Improvement of performance in this stage is based on precisely the same techniques as apply to the preceding stages, though A-C balance must be set in order to balance the results of the driver state as well as all other stages, and tube differences may dictate a wider range of adjustment than would be required were there no driver stage.

Once the signal leaves the phase inverter (and driver stage, if present), it must be "mixed" with a DC voltage source before it reaches the grid of the output tube. That grid must be at a relatively high negative potential, for the same reason that the grid of a 12AX7 must be at a slight negative potential; if the grid "goes positive" with respect to the cathode, current will flow through the grid to the rest of the circuit, the signal will "clip," and performance will suffer. Remember, it is the variations in negative voltage, provided by the signal, which vary the flow of electrons from cathode to plate. Accordingly, it is necessary to provide a stable source of negative DC bias to the signal as it reaches the grid of the output tube.

GENERAL PROCEDURES FOR MODIFICATION OF POWER AMPLIFIERS

1. Increase stability and capacity of B+ supply with additional chokes, capacitors and (perhaps) active regulation.

2. Stabilize bias supply similarly, splitting it for the two output tubes (or use a 5-10k pot between the bias isolation resistors, with the wiper running to the bias source).

3. Construct a separate, regulated, screen grid supply.

4. Increase headroom in the voltage amplifer and phase inverter stages, to permit open-loop (no negative feedback)

operation without clipping of those stages. This implies an increase in cathode bias.

5. Install an AC balance control in the cathode circuit of the phase inverter.

6. Stabilize the circuit with close tolerance metal film resistors and high reliability capacitors.

7. Reduce feedback to the minimum, replacing appropriate feedback circuit elements with interelectrode capacitors in the earlier stages. If a 10 dB reduction in feedback results in a small reduction in bandwidth and a small increase in distortion, it is worth the sacrifice.

8. Cathode couple the output stage, lifting the output transformer secondary from ground and providing a small amount of negative feedback from that winding directly to the cathodes of the output tubes.

9. When power requirements permit, wire output tubes as triodes.

10. Keep the unit cool during operation, preferably with forced ventilation.

TYPICAL AMPLIFIER INPUT CIRCUITRY WITH RECOMMENDED CHANGES (Figure 46) (All "replace" instructions call for film resistors of the same value.)

ARKAY (SPA-35, SPA-55, etc.)

This circuit is typical of very many amplifiers of its generation, and is already an excellent input stage.

1. Replace all resistors. The cathode resistor in the phase splitter stage should become a 43k resistor.

2. Wire a 5k potentiometer in series with that 43k resistor, to permit adjustment of AC balance.

3. Replace the input level control with a 470k or 500k potentiometer, and remove the 270k input resistor (replace it with a wire to the wiper of the potentiometer.

4. Replace the cathode resistor with a 750 ohm metal film.

5. Double the screen grid bypass capacitor.

Eico (HF-86, etc.)

This circuit is just fine for EL 84s, which do not need much signal to achieve full output. The two triodes, in fact, are even better than the pentode/triode combination used in the Arkay (and many more).

1. Replace all resistors.

2. Remove the 4.7k resistor and the 100 pF capacitor in the plate circuit of the first stage. Once the unit is finished, use the same procedure for tuning as is described in the step-by-step for Dyna ST70.

3. Remove the 125 pF capacitors in the plate and cathode circuits of the second stage.

4. Increase the size of the coupling capacitors to 0.1 mfd.

5. Increase the cathode resistor of the first stage from 1600 ohms to 2.2k.

6. Increase the feedback resistor from 33k to 47k.

Harmon Kardon Citation II

An excellent though complicated amplifier. Fortunately, most of the complications are unnecessary. A complete revision of the circuit would entail use of two stage of triode amplification plus one phase inverter. Certainly, the 12BY7 first stage should be replaced with a 12SL7 triode.

A lesser improvement can be achieved as follows:

1. Replace all resistors.

2. Replace the 4 mfd electrolytic with a 2 mfd mylar capacitor.

3. Double the size of all coupling capacitors.

4. Increase the cathode resistor on the first tube from 220 to 330 ohms.

5. Increase R15/49 from 220 to 330 ohms.

Acrosound (Ultalinear II)

This is an interesting and highly effective input circuit which makes use of both a positive and a negative voltage source.

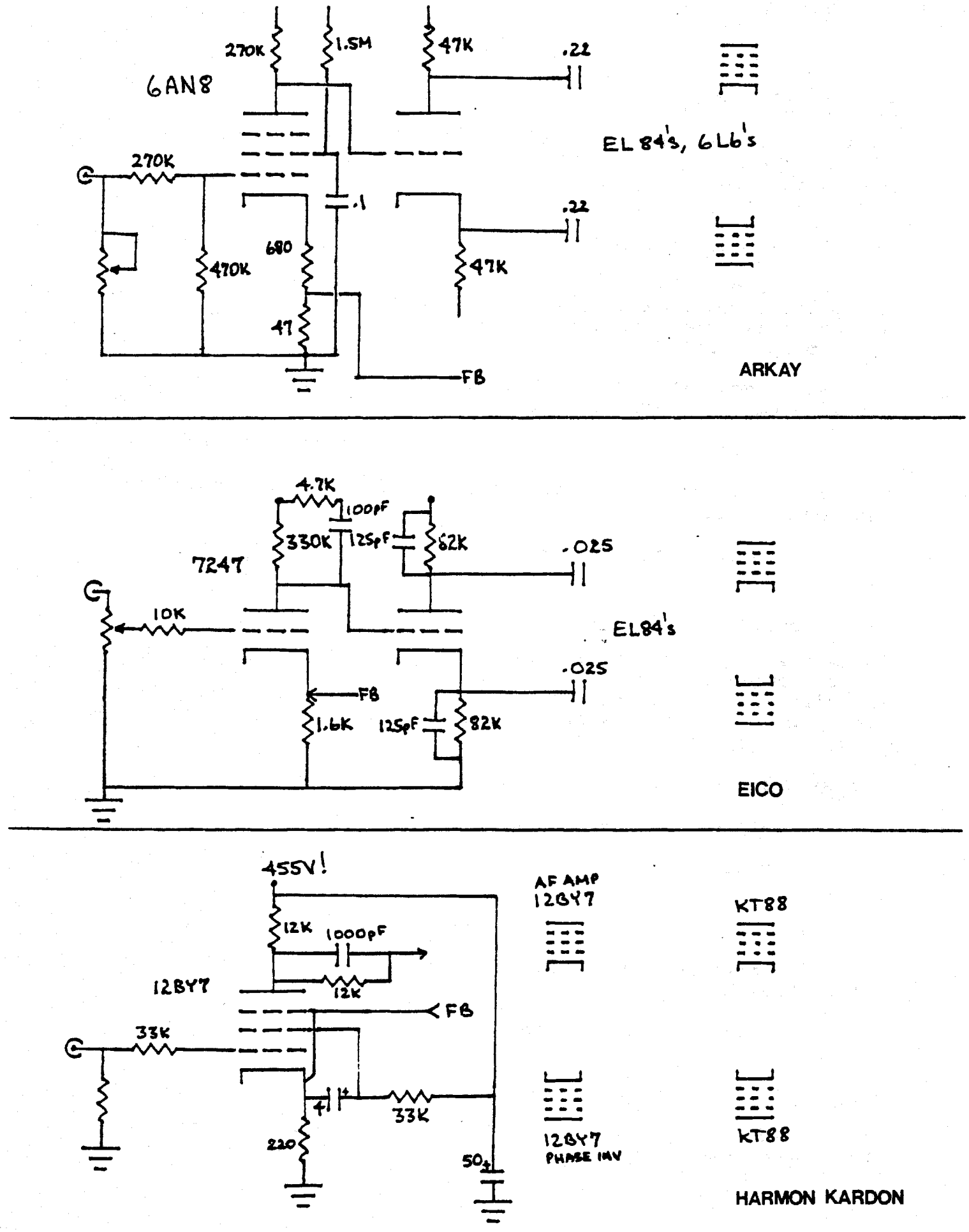
6AN8
270K
1.5M
47K
.22
EL 84's, 6L6's
270K
.1
.22
680
470K
47K
47
FB
ARKAY
4.7K
100pF
330K
125pF
62K
.025
7247
10K
EL84's
.025
FB
1.6K
125pF
82K
EICO
455V!
AF AMP
12BY7
KT88
12K
1000pF
12K
12BY7
FB
33K
4
33K
220
50
12BY7
PHASE INV
KT88
HARMON KARDON

Figure 46a

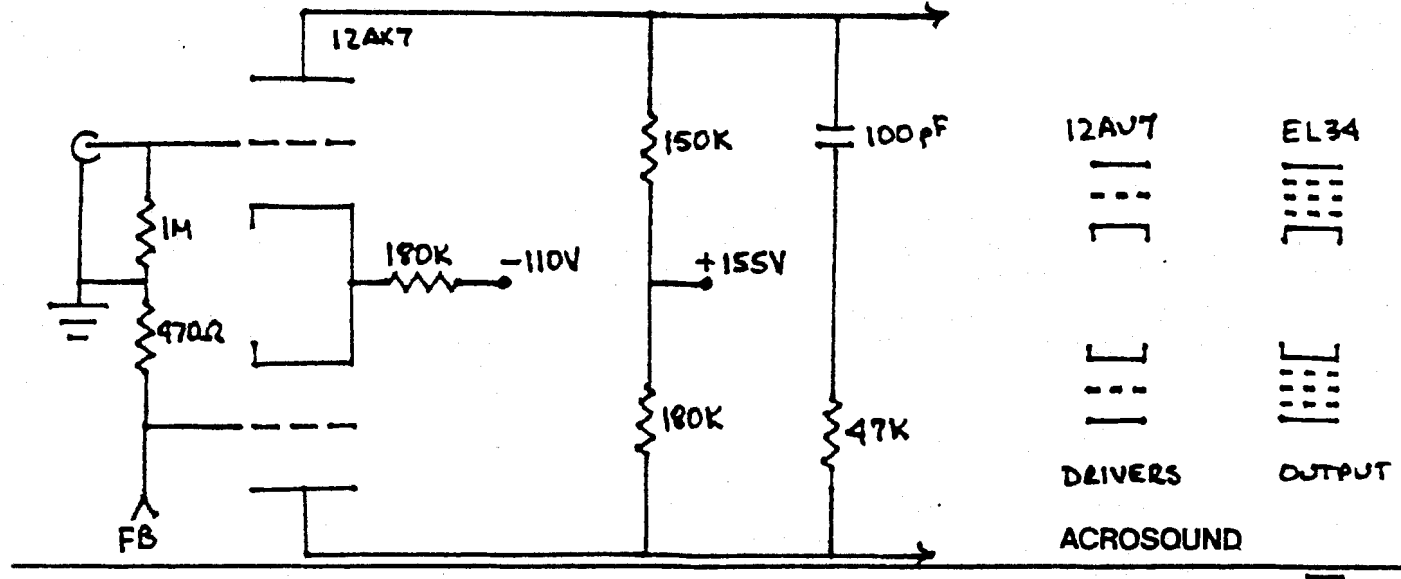
12AX7
150K
100pF
12AU7
EL34
1M
180K
-110V
+155V
470Ω
180K
47K
DRIVERS
OUTPUT
FB
ACROSOUND

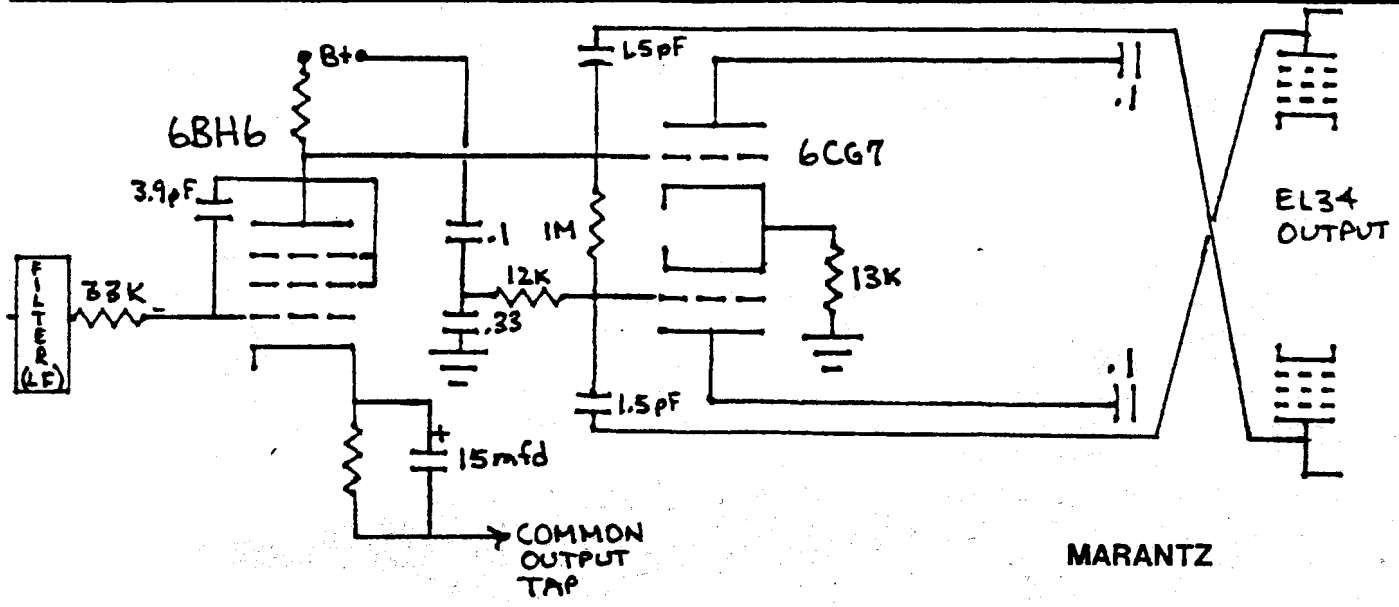
B+
1.5pF
.1
6BH6
6CG7
3.9pF
.1
1M
EL34
OUTPUT
FILTER (LF)
33K
12K
13K
.33
.1
1.5pF
15mfd
COMMON
OUTPUT
TAP
MARANTZ

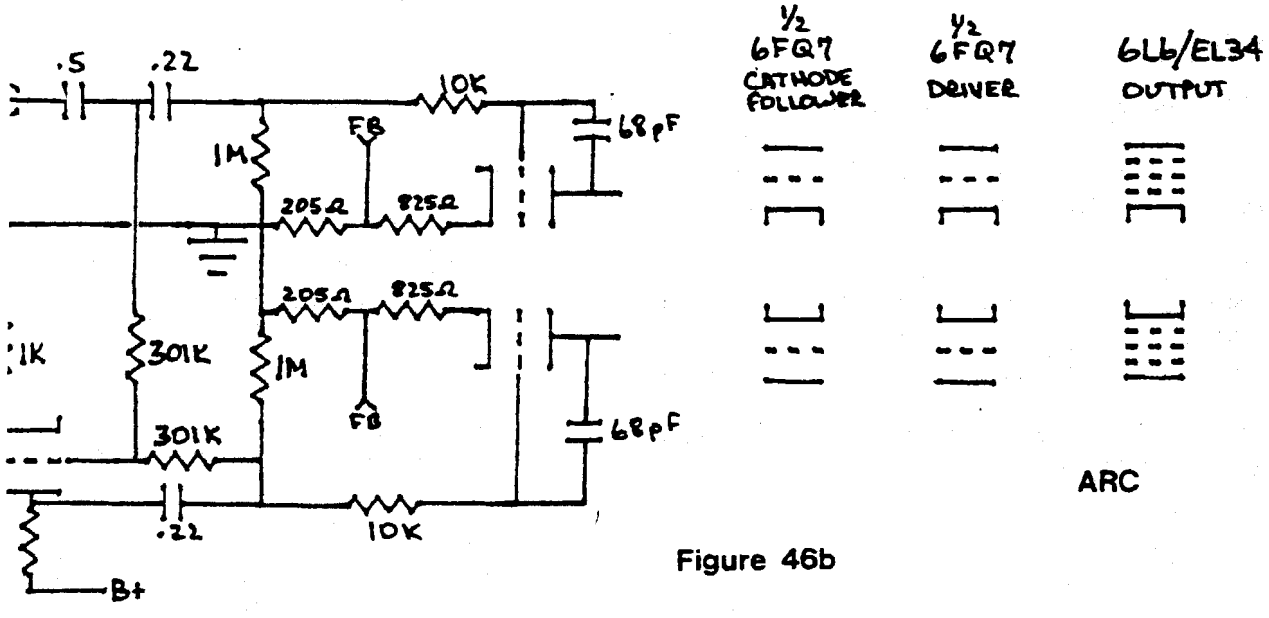
.5
.22
10K
68pF
½
6FQ7
CATHODE
FOLLOWER
½
6FQ7
DRIVER
6L6/EL34
OUTPUT
FB
1M
205Ω
825Ω
205Ω
825Ω
1K
301K
1M
FB
68pF
301K
.22
10K
B+
ARC

Figure 46b

Increase negative voltage by replacing R23 (10k) with a suitable choke, then add capacitance. The first stage is voltage amplification/phase inversion, which is direct coupled to drivers. The entire amplifier is so carefully engineered that very few improvements are recommended; collectively, they amount to:

1. Resistor replacement.

2. "Tailoring" of the HF stability circuit (100 pFd cap and 47k resistor), by selecting the lowest value cap and highest value resistor which will retain HF stability.

3. Power supply stabilization with large capacitors and regulation of the bias and B+ supplies.

Marantz

Few can criticize the performance of the Marantz 8b, which is among the most enduring pieces of audio equipment ever built. With only a few exceptions, the unit is beautifully engineered. Unfortunately, Mr. Marantz saw fit to use carbon composition resistors throughout. Stability and reliability can be improved by replacing them with resistors of the metal or carbon film type. The 6BH6 is run as a triode, and the 6CG7 is a dual triode. Improve the unit as follows:

1. Eliminate the 15 mfd/6V cathode capacitor at the cathode of the first stage.

2. Remove the 3.9 pF capacitor between plate and grid of the 6BH6, replacing it only if final tests indicate HF instability.

3. Use the "TEST" input to prevent LF rolloff.

Audio Research

1. Metal film or carbon film resistors, of course.

2. Remove the 0.5/75 capacitors in the input circuit, replacing them with solid wire.

3. Using a comparator bridge, if available, check the 205 ohm and 825 ohm resistors at the cathode of the push-pull voltage amplifier stage. If any mismatch is evident, replace as required (metal film).

4. If a 39 pF capacitor appears from pin 7 to 8 of V2 (12AX7), remove it and install a 68 pF capacitor from pin 7 to 6.

TYPICAL AMPLIFIER OUTPUT CIRCUITRY, WITH RECOMMENDED CHANGES (Figure 47)

The ARC amplifiers are designed to be partially cathode coupled, a technique which enhances stability and reduces distortion. It is suggested that, wherever feasible, this feature be incorporated into any proposed modification. Also, whether the unit in question has separate bias or not, it is recommended that all output tubes be equipped with a phone jack or other DC current flow test point. This will permit accurate adjustment of each tube, when separate bias or a DC balance control is installed, or quick detection of a badly matched pair of output tubes.

All resistors shown in the schematics in Figure 47 should be replaced with metal film units of comparable power rating. The last of the schematics shows the procedure by which a DC balance control can be inserted into the bias circuit. Each of these circuits has been simplified to make the essential elements easier to understand.

Acrosound: EL34

This is an excellent circuit which lends itself to conversion to triode operation. If power is to be retained, however, it must be run with pentodes. Add stability to the screen grid supply by wiring a choke in series between pin 4 and the transformer tap. Then separate the cathodes (pin 8) from all other circuitry and connect a wire from pin 8, V3 to the yellow (16 ohm) output tap. The other cathode is connected to the black lead (common). The variable damping factor potentiometer should be removed; it is an anachronism!

Connect the black lead (from the transformer) directly to the common output tap, and remove the wire between that tap and ground. Connect a 2 ohm resistor between the 4 ohm tap and ground, and set bias to produce 0.2V between the 4 ohm tap and ground. Change the feedback resistor from 470 to 680 ohms.

H. H. Scott: 6BQ5

This odd little circuit uses the same source for the screens as it does for the plates; 360V. Improvement is easy, as once the screen grid is raised slightly above the plate potential, and a 20 mfd (450V) capacitor added to the screen grid circuit, it becomes a very good output stage. Cathode coupling is something of a chore, but it can be done by removing the 270 ohm resistors and the 25 mfd capacitors, and then connecting the cathode (pin 3) of V9 to the 16 ohm tap, the cathode of V10 to the common tap, and removing the the grounding wire from the common tap--connect it to the 4 ohm tap. In this particular application, no resistor should be used between the 4 ohm

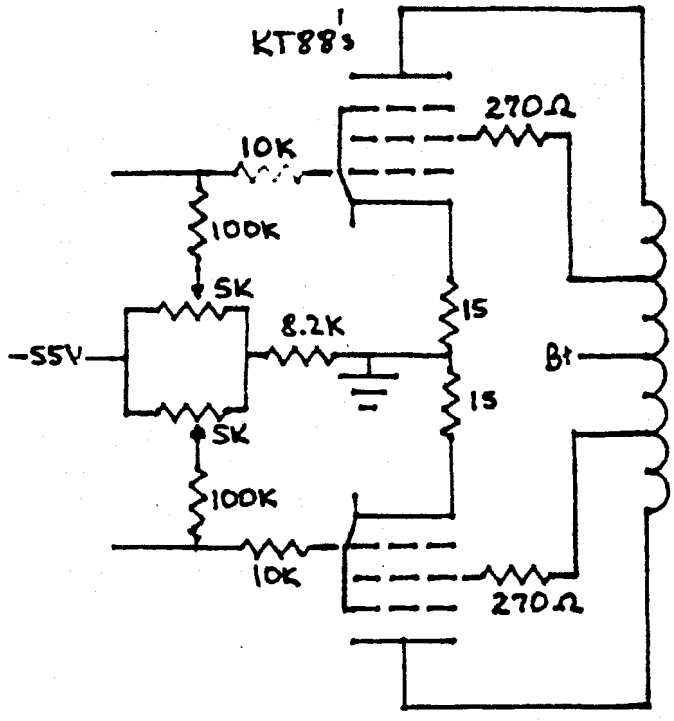

HARMON KARDON

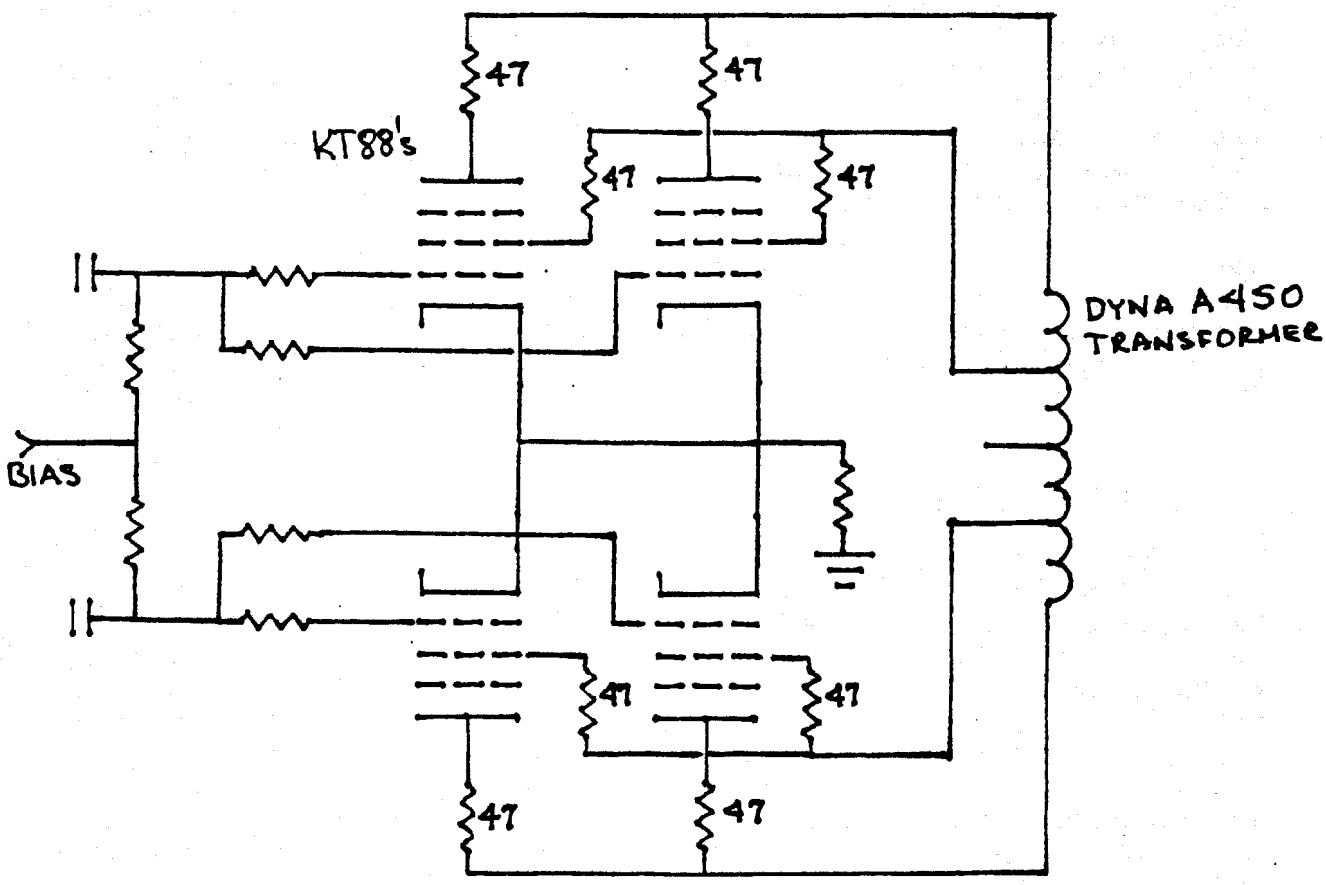

120 WATTS CLASS AB PENTODE

50 WATTS CLASS A TRIODE

Figure 47a

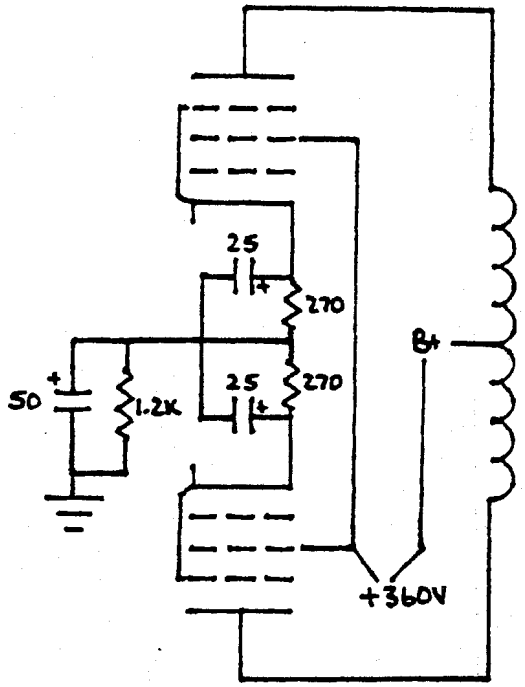

SCOTT

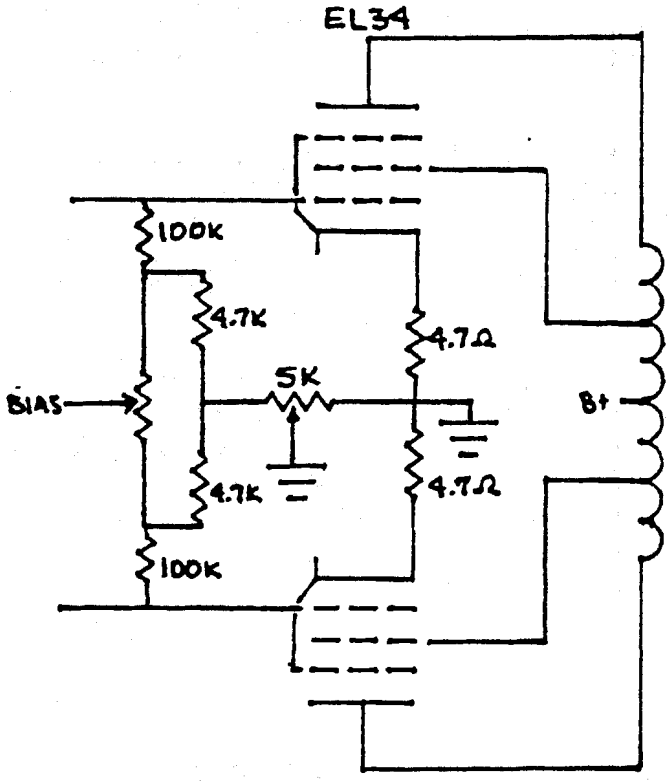

ACROSOUND

Figure 47b

tap and ground. Measure tube current with jacks inserted into each cathode circuit; set bias to produce 40 ma current flow from each tube.

Harmon-Kardon (Citation): KT-88

This circuit looks like an illustration in a text on tube theory; the output stage cannot be more straightforward. Bias and AC balance metering is already installed, of course, so no modification is required to provide it. The most satisfactory approach is to stabilize the screen grid supply with chokes, in series. The best choice is replacement of the 270 ohm resistors with a choke of approximately the same DC resistance. Cathode coupling is relatively easy, but it will invalidate the readings on the bias meter unless a switch is added to permit examination of each tube separately. To couple the cathodes of the KT88s to the secondary of the output transformer, use the same procedures as described for the other amplifiers, but insert the 15 ohm resistor between the 4 ohm tap and ground.

Eico: EL84

This amplifier has been used as a tweeter amp in some very fine systems, with excellent results. Such use demands careful treatment of the output tubes in order to take advantage of the fine (coincidence?) output transformer, which is about the same in performance as the Brooks.

To exploit this amplifier's potential, first replace the 350 ohm 10 watt resistor in the power supply with a 5 Hy choke of less than 50 ohms resistance, capable of passing at least 150 ma current. This will raise both the B+ and screen supply by about 25V, which will slightly shorten the life of the tubes but greatly improve performance.

Connect V5's cathode to the orange (32 ohm) tap and V6's cathode to the common tap, removing the ground connection. Connect a 125 ohm resistor between the 8 ohm tap and ground, and install cathode current test jacks. Disconnect and discard the 165 ohm resistor and the electrolytic capacitor. Change the feedback resistor from 22k to 33k, eliminating the 47 pFd capacitor. "Tune" the unit with small caps between pin 7, 3 and 6 of the second stage.

Fisher: 7189

Begin by increasing the capacitance of C1 (triangle) to at least 100 mfd at 450V. Then clip the 0.47 ohm 5W resistor from the output tap marked "COM." Couple the cathode of V5 to the 16 ohm output tap and the cathode of V6 to the ground terminal,

removing the ground lead from that point and the 10 ohm resistors. Connect the 4 ohm tap to ground, and measure current flow with jacks and an ammeter. Remove all center channel connections and wiring. Decrease R17/21/34/38 from 220k to 180k. Increase the feedback resistor from 3900 ohms to 4.7k.

Eico: EL34

This circuit (found in the HF 87) fails to exploit the capability of the EL34, as no separate bias supply is used. Self-biasing with the EL34 is a poor procedure. This is a pity, since the output transformer has a lot of metal and excellent linearity. Any attempt at modification should begin with installation of a small transformer power supply providing about 75V, of which -35V will be tapped for grid bias. On a few units, the blue leads from the transformer provide 50V; this can be rectified and used.

Add the grid bias voltage between the 102k resistors originally wired to ground. Then cathode couple each output tube; V3 and V6 are wired to the 32 ohm output tap, while V4 and V7 are wired to the Common tap, which is disconnected from ground. Then connect a 15 ohm (10 watt) resistor between the 8 ohm output tap and ground. Increase the feedback resistor from 7500 to 10k ohms. Remove the 225 pFd feedback capacitors and try the unit with no capacitors in the feedback circuit. By trial and error, add capacitance as required. No more than 100 pFd has been required in experiments, but no channel has been quite like any other.

Next, add a choke in series with each screen grid. Maximum permissible resistance of the choke is 100 ohms. Note carefully that this particular amplifier (the HF87) uses a half-wave rectifier, with two 300 mfd capacitors in series. Augmentation of the power supply capacitance is recommended but must be done carefully. First, replace the 50 ohm resistor (R33) with a choke of the same or less DC resistance. Next, add about 100 mfd to C3, which requires at least a 500V capacitor.

notes

chapter eleven

more amplifier data

STEP-BY-STEP: ST-70 (Figure 48)

1. Clip all wires attached to the existing four-section filter can and check the capacitor for leakage; if excessive, replace with the largest two-section 525V capacitor available. If the capacitor is good, reduce it to two sections by connecting △ with □ , and ⌓ with — .

2. Remove the tube rectifier and socket, taping or heat-shrinking the filament leads. Replace the socket with the largest two-section 500V capacitor available, soldering (with a gun, not an iron) at least two of the capacitor tabs to the chassis--a bit of sandpaper will help prepare the surface.

3. Wire up a rectifier circuit using four IN4007 diodes and four 470K resistors, as shown in Figure 5. The two red leads (perhaps faded to pink) from the transformer are connected to the unbanded ends of the first diodes, and the banded ends of the second diodes are connected to one terminal of the 525V capacitor; this requires re-routing of the high voltage leads from under the clamp leading to the tube rectifier.

4. Connect one of the choke leads to the same terminals to which the diode rectifier is wired, the other choke lead goes to the other capacitor terminal(s). Replace the red leads (going to the output transformers), soldering them to the "other capacitor terminal(s)" identified in the preceding sentence.

DYNACO STEREO 70

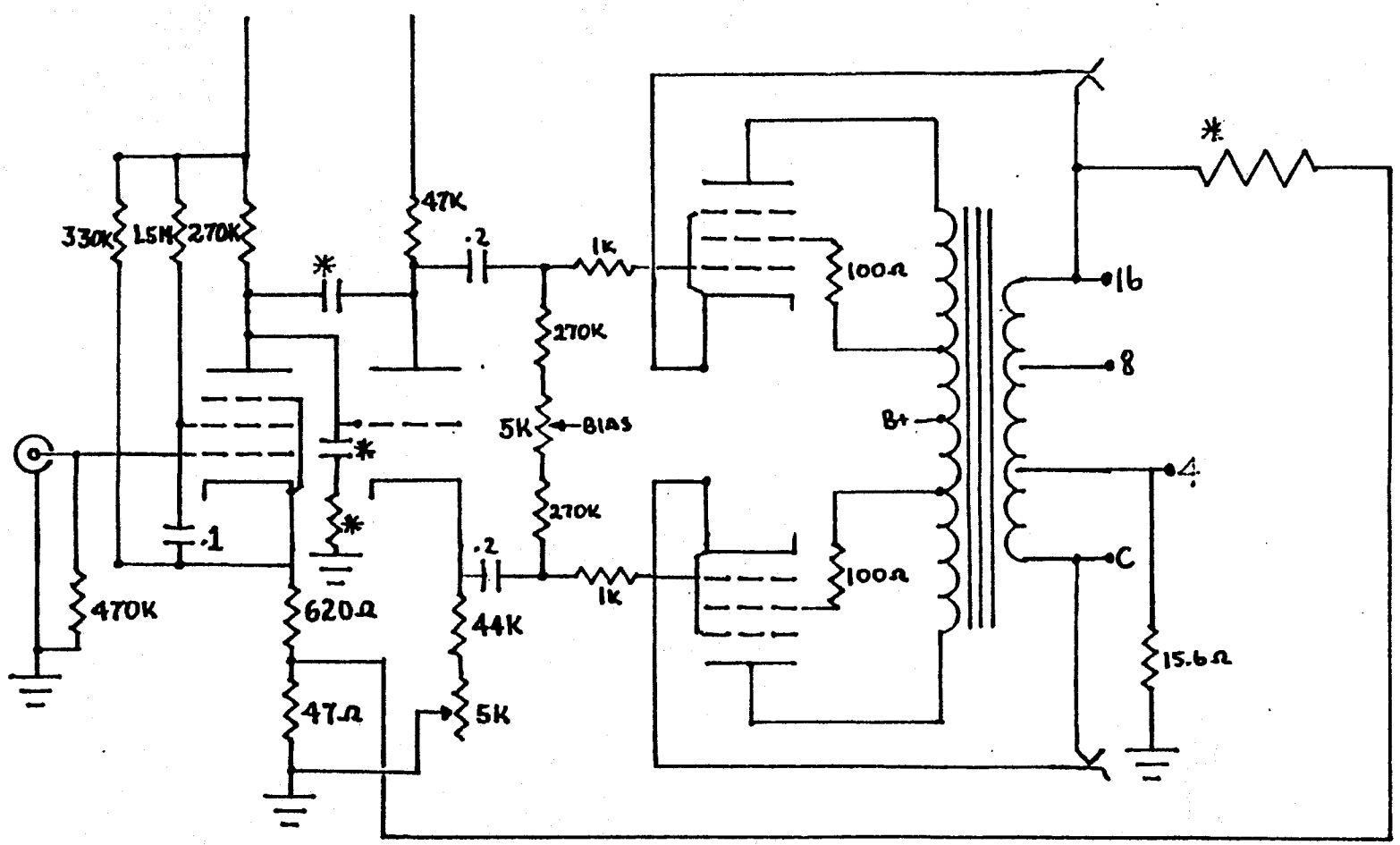

The values marked with an asterisk will vary from unit to unit. The object is to use the smallest capacitors and the largest resistors possible, both in the feedback circuit and in the HF stability circuit.

This circuit assumes a major improvement of the power supply, including larger electrolytic capacitors, regulation of the bias circuit, and replacement of the thermionic rectifier with silicon diodes.

Figure 48

5. Mount a two-point terminal strip adjacent to the capacitor, wiring the 6.8k resistor from the "other" capacitor terminal to the first point on the strip, and the 22k resistor between the two terminals. Run a wire from each of the solder points to corresponding terminals on the second filter capacitor, located in the old tube rectifier hole. Run another wire from the point between the two resistors to terminal 20 on the printed circuit board. A fourth wire goes from the 22k resistor to terminal 19 on the printed circuit board.

6. Replace each of the 50 mfd 75V (or 100V, on some) electrolytic capacitors in the bias supply with capacitors rated at 500 mfd or more. The first of them (closest to the center transformer) must be a 75V cap, while the other may be rated at 50V.

7. Clip all wires from the octal sockets at the front of the chassis, and unsolder the filament leads from the printed circuit board. Strip the leads from the output tubes (which were clipped from the octal socket), dress those leads close to the chassis, and solder them to points 4/5 and 15/16. If they do not reach, replace the leads. Remove all other leads which were clipped from the octal socket.

8. Clip the wires running from pin 8 of each output tube to the same pin on the other output tube, and remove the 15.6 ohm resistor. Run a wire from pin 8 of the tube with the blue/white, green/white wires (closest to the transformers) to the 16 ohm output terminal. Run another wire, from the same pin of the other output tube to the Common output terminal, clipping the wire running from that terminal to ground.

9. Strip 1/4" from the end of that last wire (to ground) and, using heat shrink or another insulator, solder one end of the 15.6 ohm resistor to the wire and the other end of the resistor to the 4 ohm tap.

10. Clip the green/white wire from pin 4 of the output tubes nearest the transformers, and solder a 100 ohm resistor between the end of that wire and pin 4. Repeat the process with the green wires of the other output tubes.

11. Remove the "Stereo-Mono" switch from the front of the chassis, clipping all attached wires. Resolder the 470k resistor between the input jack of the left channel and ground, and clip all unnecessary wires.

12. Remove the 1W 18K resistors, the 390 pF capacitors, the 18K 1/2W resistors, and discard. Then remove all other resistors for which a 1% metal film replacement is available.

13. Replace the 18K 1/2W resistor with a 100K resistor.

14. Replace the 0.05 mfd screen grid capacitors with 0.1 mfd/400V capacitors.

15. Replace the 0.1 mfd coupling capacitors with 0.22/600V.

16. Solder a 500V 20-24 picofarad capacitor between pins 1 and 2 of each 7199.

17. Add a 5k pot between the 270k bias resistors, with bias voltage going to the wiper.

18. Replace tubes, ensuring that each pair of output tubes are matched.

19. Rotate each bias control CCW.

20. Turn on unit, allowing minimum of three minutes for warm-up. Measure bias between 4 ohm output tap and chassis ground; set bias at 1.56V, which is precisely the output of a fresh "1.5" volt flashlight battery.

ST70: ADDITIONAL OPTIONS

1. Bias supply regulation: carefully measure the voltage drop across the last resistor in the bias supply. It should be about 29V. Install a zener rated at 1-5V less, shunting that resistor, with the banded end of the zener at ground (the end of the terminal strip closest to the edge of the chassis). At the same time, shunt the zener/resistor combination with a 0.1 mfd/100V capacitor.

2. Power supply regulation: see text for shunt/series regulators.

3. "Tuning": Remove the resistor/capacitor from pin 9 of each 7199 to ground, and the 20-24 pF capacitor between pins 1 and 2. With a square wave generator set at 5000 Hz, examine the output of each channel. If no ringing (oscillation) is evident, do nothing more. If an oscillation is present (likely), shut down and unplug the amplifier, then wire the smallest possible capacitor between pins 1 and 2 of the 7199. Choose a value which will reduce the ringing to one oscillation, or cycle. The values for the two channels will probably be different. Next, remove that last bit of ringing with the smallest possible capacitor between pin 9 of the 7199 and ground.

4. Cooling: Attach a "Muffin" or "Boxer" fan, oriented to pull air <u>from</u> the amplifier, or use the exhaust box described earlier in the manual.

5. Screen grid power supply: Wire a choke of at least 4 Henrys inductance and 100 ohm resistance in place of the 100 ohm resistors attached to pin 4 of each output tube.

6. The ultimate change would be replacement of the 7199 with one and a half dual triodes, as described earlier in the text.

7. To assist in setting bias, a meter can be added (with a proper series resistor) between the 4 ohm output tap and ground, switchable from one channel to the other.

8. Triode operation (produces about 18W per channel): connect 100 ohm resistors between screen (pin 4) and plate (pin 3), disconnecting and taping the green/white and green leads from the output transformers.

STEP-BY-STEP: DYNACO MKIII POWER SUPPLY (FIGURE 49)

1. Remove the rectifier tube and socket, taping the two yellow leads.

2. With a chassis punch, cut a 1-1/8" hole between the output transformer and the printed circuit board. It is a tight fit, and works only if the hole is near the midpoint of the transformer.

3. Mount the largest 525V two-section capacitor available in the first hole, from which the rectifier tube socket was removed. Bend over the tabs and solder at least two to the chassis (sandpaper will help break the glaze on the chassis).

4. Mount the largest 500V two-section capacitor available in the second hole, in a similar manner.

(Twist tab mounts may be used, of course). Drill the two additional required holes and make each of the main holes 1-1/4" rather than 1-1/8", then solder ground leads from the twist tabs to the ground point on the original capacitor.)

5. Drill a 3/16" hole midway between the choke and the old rectifier tube socket and mount a two-point terminal strip. Solder each of the red (high voltage) leads from the transformer to the tabs on the terminal strip, keeping the wires twisted together. These are the wires which once were connected to pins 4 and 6 of the rectifier.

6. Solder a wire from either of the tabs on the new 525V capacitor to the tab marked with a half circle on the original capacitor (use the wire which once went to pin 8 of the rectifier tube, if it fits).

7. Solder a wire from the other tab on that capacitor to the tab marked with a half square on the original capacitor.

DYNACO MARK III

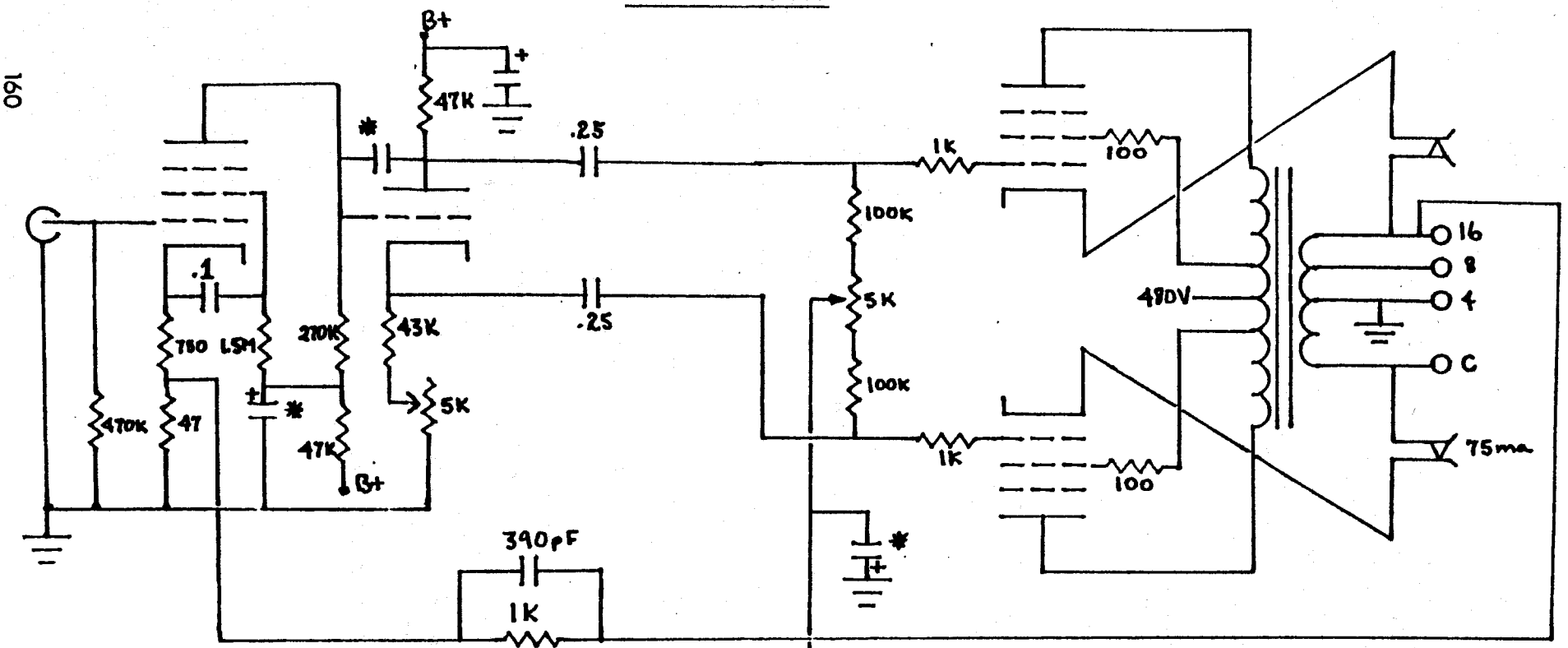

* SEE TEXT

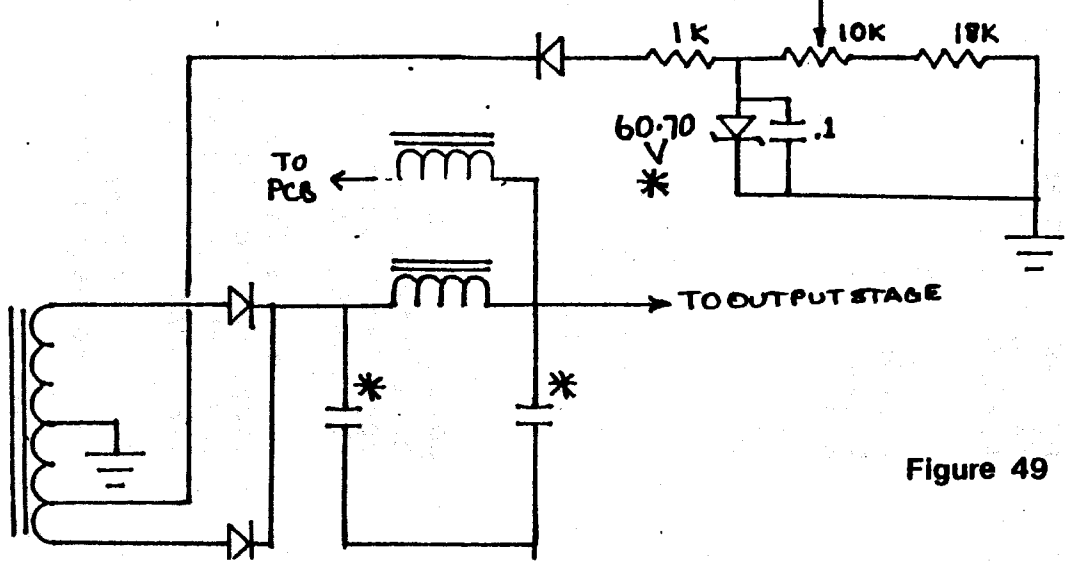

This circuit also assumes a major improvement to the power supply, including replacement of the 6800 ohm resistor with a suitable choke, in order to increase voltage and stability in the B+ circuit supporting the voltage amplifier and phase inverter.

Figure 49

8. Solder a wire from one of the tabs on the 500V capacitor to the tab marked with a half triangle on the original capacitor.

9. Solder a wire from the other tab on the 500V capacitor to the unmarked tab on the original capacitor.

10. WITH HEAT SINKS, solder the banded ends of the two GE-511 or equivalent silicon rectifiers to the tab on the 525V capacitor connected to the half circle tab on the original capacitor.

11. WITH HEAT SINKS, solder the other ends of the diodes to the terminal strip tabs, to which the red transformer leads have already been soldered.

12. Mount a small choke (anything over 2 Hy, 50 ma, and from 3000 to 4000 ohms DC resistance) at any clear point above or below the chassis.

13. Remove the 6800 ohm resistor between the half square and the unmarked tabs on the original capacitor, and solder the twisted (new) choke leads to those points.

14. Remove the 50 mfd electrolytic capacitor closest to the choke, replacing it with a 500 mfd/75V capacitor. Watch polarity!

15. Remove the other 50 mfd electrolytic capacitor, replacing it with another 500 mfd/75V or 60V capacitor.

(Capacitors of the same value, by different manufacturers, vary in size. Attempt to buy the smallest available, or space becomes a problem.)

16. Remove everything connected to the octal socket in the chassis edge, unsoldering each component or wire where it is attached to the amplifier circuit. Ensure that the filament leads are still well soldered to points 6 and 8 of the printed circuit board.

17. Replace the tubes, turn the bias control fully counterclockwise, and turn the unit on. Allow five minutes warm-up before proceeding.

18. With a VTVM or high impedance VOM, measure the negative voltage appearing at pin 5 of the output tubes. Adjust the bias control until the voltage is -58V with respect to chassis ground.

19. Measure the negative voltage appearing between ground and the terminal strip end (as opposed to the rectifier end) of the 1000 ohm resistor in the bias circuit. It should be between 60 and 70 volts. Note the voltage carefully, and

record it. Shut off the amplifier and disconnect it from all power; either discharge the capacitors or wait ten minutes before proceeding.

20. Buy a zener diode rated at approximately 5% less voltage than that measured and recorded above. Install it with the banded end soldered to chassis ground and the other end soldered to the terminal strip point where the 1000 ohm resistor is attached. In parallel with the zener (connected to the same points as the zener), solder a 0.1 mfd 100V capacitor. USE HEAT SINKS WHEN SOLDERING THE ZENER.

21. Turn on the unit once again, and remeasure the voltage from the same end of the 1000 ohm resistor and ground. That voltage should have been reduced by two or three volts. If there is no noticeable reduction, replace the zener diode with one of lower voltage or closer tolerance. To achieve regulation of the bias circuit, it is necessary that insertion of the zener reduce voltage slightly.

STEP-BY-STEP: DYNACO MKIII PRINTED CIRCUIT BOARD

All "replace" instructions call for film resistors....

1. Replace the 680 ohm resistor attached to pin 9 of the 6AN8 with 750 ohms.

2. Replace the 47 ohm resistor.

3. Replace the 470k resistor.

4. Replace the 1.5 megohm resistor.

5. Remove the 12 mmf capacitor.

6. Replace the 47k resistor wired to solder point 6.

7. Replace the 270k resistor.

8. If an oscilloscope is available for subsequent AC balance and adjustments, replace the 47k resistor wired to pin 3 of the 6AN8 with a 5k potentiometer and a 43k-44k resistor in series. Replace the other 47k resistor (wired to pin 1 of the 6AN8).

9. If no AC balance control is desired, simply replace both 47k resistors.

10. Locate the two 100k bias isolation resistors and the wire running from the bias potentiometer to solder point 2. Place new resistors <u>under</u> the PCB, inserting and soldering only those leads running to solder points 1 and 3. The resistors may be left "standing," unless the builder desires to do more rebuilding of the circuity.

11. Drill a hole in the chassis between the PCB and the output transformer, behind one of the "new" capacitor cans. Install a 5k potentiometer.

12. Run a wire from the exposed lead of one of the 100k resistors to either of the "end" terminals on the potentiometer.

13. Run a wire from the other resistor to the other "end" terminal on that potentiometer.

14. Remove the wire soldered to point 2 on the PCB, reattach it to the center terminal on the new potentiometer. The center terminals of the two potentiometers are now wired together.

(Alternative procedure is to cut the printed circuit which joins the two 100k resistors, mount new film resistors above the PCB, then drill two 1/32" holes and solder the two wires to these points.)

15. Remove the 11.2 ohm resistor running from pin 8 of the output tube and discard it.

16. Clip the wire joining pin 8 of each output tube to the other.

17. Drill appropriate holes in the chassis at either end of the output terminal strip, and mount two phone jacks of the "normally closed" type.

18. Run a wire from pin 8 of the output tube socket nearest the chassis edge to one of the NC contacts on the phone jack nearest the 16 ohm output tap. Then connect the other phone jack NC terminal to the 16 ohm output tap.

19. Run a wire from pin 8 of the other output tube to the NC contact on the phone jack nearest the Common output tap. Then connect the other phone jack NC terminal to the Common output tap, clipping the ground wire already there.

20. Solder the just-clipped ground wire to the 4 ohm output tap.

21. Remove the green-white and the green wires from pin 4 of the output tubes. Install two one point terminals bolted through the appropriate cooling slot. Solder the just-clipped wires to the terminal nearest the output tubes from which they were cut.

22. Install a 100 ohm 2W resistor between the new terminal and pin 4 of the appropriate tube. This process places a 100 ohm resistor between the screen grid taps (green-white and green) and the screen grid itself (pin 4).

23. Remove the 750 mmf capacitor (tubular) and the 390 mmf capacitor (rectangular). With lead extensions, or on the underside of the PCB, replace the 750 mmf capacitor with the 390 mmf unit.

24. Replace the 1000 ohm resistor wired to each output tube socket.

25. Turn on the unit, with the original bias potentiometer turned fully counterclockwise.

26. With no signal and no lead, check current flow with a phone plug wired to a milliameter....use the phone jacks just installed.

27. By juggling the primary bias pot and the DC balance pot (just installed), set current flow through each KT88 at 75 milliamperes. If current flow is too high, check (and replace, if necessary) the 0.25 mfd coupling capacitors, which may be leaking.

28. Once bias is set, "tune" the unit in accordance with the instructions for the ST70. If no square wave generator or oscilloscope is available, proceed as follows:

29. Replace the 12 mmf capacitor (first blank space "north" of the 6AN8).

30. Solder a 20-24 pF capacitor between pin 6 and pin 2 of the 6AN8.

31. Play the unit. If any harshness appears in the top end, insert a 100-300 pF capacitor in the space once occupied by the 390 pF capacitor--keeping the capacitance to the minimum necessary.

32. After 30 minutes of play, reset the bias to establish 75 ma current flow through each output tube.

PENTODE VS TRIODE OPERATION (FIGURE 50)

Many purists feel that the triode "sounds better" than the pentode, which is one reason why input circuitry in some amplifiers is all triode. Until recently, it has been impossible to achieve reasonably high power input with a single pair of triodes. Japan's high fidelity industry is now employing a new power triode, designated variously the WE4300B, 300B, or W4300. Though not yet easily available in the United States, this tube promises to permit a substantial improvement over conventional pentodes and triodes. Unfortunately, the tube requires a rather high B+ (over 600V), which will necessitate massive modifications to existing power supplies if the 300B is to be used with existing amplifiers. At least one Japanese manufacturer

is now producing a 60W amplifier using a single triode output tube, running at over 1200V! Though it seems to violate many age-old tenets, it sounds excellent.

Nearly every "high fidelity" amplifier can be converted from pentode to triode operation. Output power is reduced, but if the unit is to be used as a high frequency amplifier in a bi-amplified system, that usually imposes no undue hardship. The procedure by which the triode conversion is accomplished is quite simple and is easily reversed; see Figure 45.

1. Referring to the schematic for the amplifier in question, locate the output tube pin to which the screen power supply is wired. On 9 pin tubes (EL84, 7189, etc.) it is pin 9. EL34, KT88, and other 8 pin tubes use pin 4.

2. Disconnect the screen grid from its power supply and tape the wires.

3. Solder a 100 ohm resistor between the plate of each tube and its screen grid.

....and that's it.

BI-AMPLIFICATION (FIGURE 51)

If a stereo amplifier is being modified with multi-amplification intended, it is suggested that each unit contain one bass amplifier and one treble amplifier. This will reduce the burden on the power supply and may dramatically improve performance. Level controls should be added if they are not present on the crossover.

It is possible to modify the input circuitry of an amplifier to eliminate any need for a separate electronic crossover. Only general recommendations can be made, since every application is a separate problem. Figure 51 shows some elementary techniques for shunting either highs or lows to ground in typical installations. If such techniques are adopted, the speakers must be capable of accepting a rather gradual rolloff above or below the nominal crossover frequency.

Satisfactory design of a rolloff circuit demands either a lot of technical expertise or a lot of trial and error. If the builder is pursuing the latter course, it is important that one rule be obeyed. When building the tweeter amplifier circuit, ensure that it rolls off above the selected frequency on the first try, then work down. This will prevent damage to the drivers.

The basic principle governing rolloff circuitry is the fact that capacitors act like resistors as the frequency goes down. A small enough capacitance in series with the signal will roll

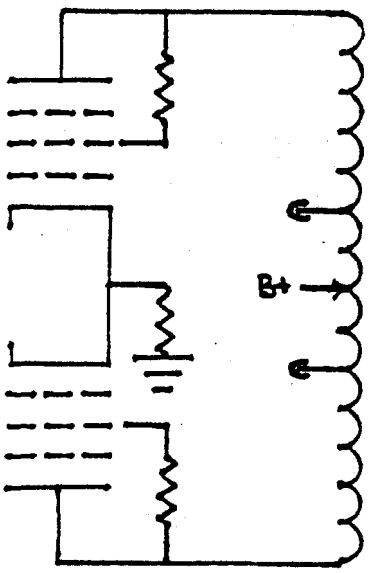

All pentodes will operate as triodes if the screen grids are connected to the plate circuit.

In most cases, it is recommended that this connection be through a 100 ohm resistor.

The presence of the suppressor grid between the screen grid and the plate will have no significant effect on the performance of the tube as a triode, due to the distance between the individual windings of that grid. It is possible, however, to disconnect the suppressor grid from the cathode.

Note that the screen grid taps on an ultralinear transformer are a source of high voltage. They should be carefully secured with heat shrink or another form of insulation.

Those few amplifiers equipped with a separate screen grid voltage source are converted to triode operation in the same manner, and the same precautions are required.

A good 6BQ5/EL84 amplifier is capable of producing a maximum of twenty clean watts per channel if the tubes operate as pentodes. A triode conversion will reduce power by about one half, but even ten watts per channel is sufficient to drive many efficient tweeter systems.

The major advantage to triode operation is the predominance of second harmonics as distortion products.

Figure 50

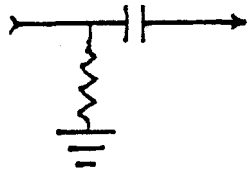

This circuit will tend to pass high frequencies and roll off low frequencies. Component values depend upon the impedances present in the circuit, but a good starting point, for a 1000 Hz crossover, is as shown in the diagram.

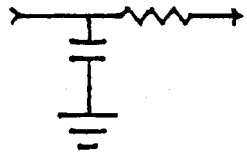

This circuit is the reverse of the LF rolloff network shown above. HF will be shunted to ground, while low frequencies will be passed to the next stage.

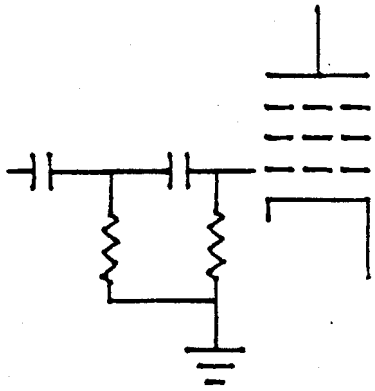

Insertion of one of the above networks in a circuit can take place before the first tube, but only if a LF rolloff is sought. HF rolloff networks should always be placed after the first tube in any amplifier circuit, in order to isolate the effect from the other channel.

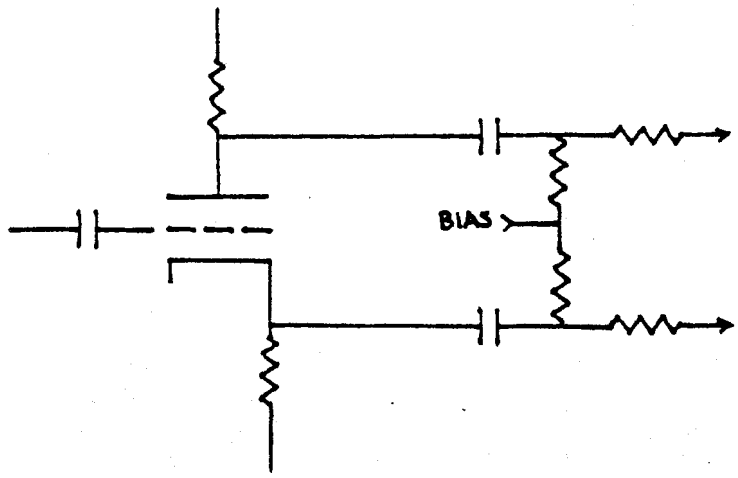

In the simplest of rolloff networks, select the values of the capacitors shown to impede transfer of LF signal.

Depending upon the impedances already present in the circuit, a good starting point would be .001 mfd for all three of the capacitors shown; this would result in attenuation of all frequencies below about 200 Hz.

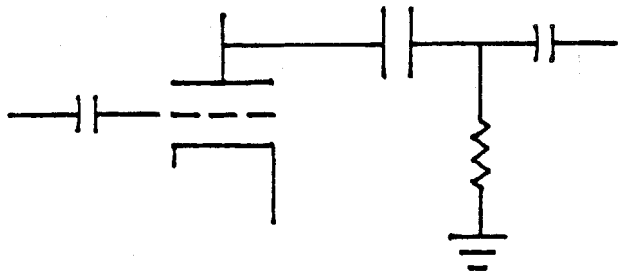

This shows insertion of a simple rolloff network after the original blocking, or coupling capacitor.

Figure 51a

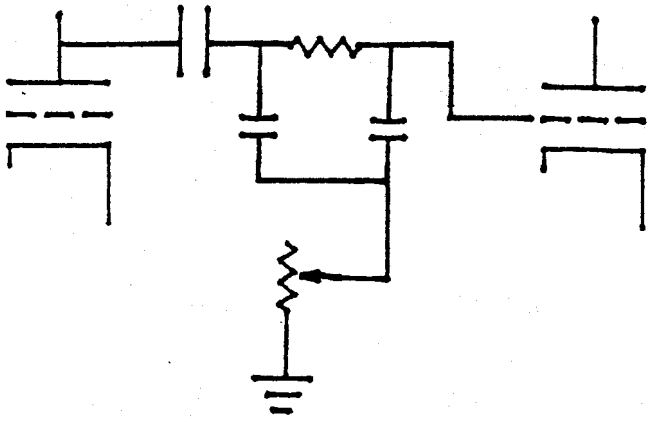

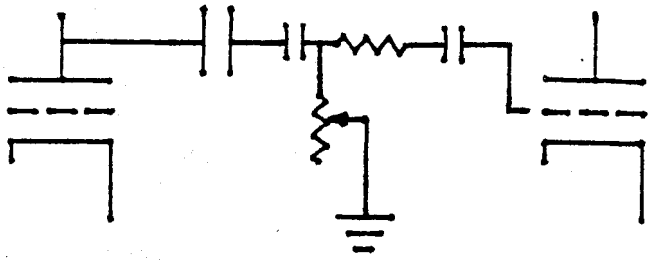

These circuits illustrate one means of varying the effect of a rolloff network. Again, specific values depend upon the impedances present, but general starting points can be as shown above. Always begin the trial and error process with values certain to protect the tweeter; keep the capacitors below .001 mfd until the effect has been evaluated with a test record or test equipment.

Figure 51b

off the low end. On the other hand, if the capacitor is from the signal path to ground, only the low frequency portion of the signal will make it to the next stage.

POWER AMPLIFIERS: CLASS OF OPERATION

There exists a great deal of mystique regarding the Class A amplifier, perhaps supported by many sophisticated audiophiles seeking the nth degree of perfection. The general feeing seems to be that Class A operation is always better, for some reason, than AB or B.

Virtually all (vacuum tube) high fidelity amplifiers manufactured in the last 20 years have been designed for Class AB operation, except for the McIntosh products, which are Class B units. It is this characteristic of the McIntosh amplifiers which makes them unsuitable for modification, unless the audiophile is willing to expend a lot of effort. Application technology has moved beyond the limitations which stimulated development of the McIntosh units, which were designed to operate Class B in order to produce more power than was available from other classes of operation. At the time these circuits were being devised, there were no "clean" AB high-power amplifiers. McIntosh developed a spectacular innovation in transformer winding which permitted high power Class B operation with acceptable bandwidth and distortion. Unfortunately, that very development now tends to limit the possible improvement to the associated circuitry. In other units, the limiting factors are the voltage amplifier, phase inverter, driver, and power supply. The "iron," or transformers, are capable of better performance than the original circuitry permitted. In the McIntosh, the output transformers are the limiting factor, which effectively removes these once great performers from the modification shopping list, though improvement to the power supply, creation of additional headroom in the early stages, and stabilization of the bias supply will help to some degree.

All Class AB amplifiers work as Class A amplifiers much of the time, moving to Class B operation when signal level reaches a point where an electronic shift takes place. A perfectly adjusted Class AB amplifier is sonically nearly identical with a Class A unit, and is a good deal more efficient.

Maladjustment of a typical AB amplifier produces an increase in harmonic distortion. Fortunately, a large part of the distortion consists of second harmonics, which are not very objectionable. Occasionally, the maladjustment causes higher order harmonics, which can be relatively painful.

It is no great task to convert any tube amplifier to Class A operation; simply limit the input signal level to a point which

will keep the original circuit from shifting into AB. No technical expertise is required--just keep the volume down.

If the power supply of the amplifier will provide the requisite current flow for "high" power Class A operation, it is not difficult to re-bias the output tubes to restrict the shift to AB. For example, the KT88 is normally run at a grid bias of -55V. Under such conditions, each KT88 of a push/pull pair will conduct about 70 ma current. Adjusting bias to -9V will raise current flow to about 200 ma, and if the power supply will provide sufficient energy, the unit will run Class A.

To build a Class A amplifier, start with the power supply. Class A operation is so inefficient that to produce reasonable output power will require an apparently disproportionate power transformer. The power supply of a Citation amplifier is about the right size for a ST70 running Class A. The EL34s can be biased to idle at about 100 ma per tube at about -13.5V grid bias. Maximum output/channel will be about 20 watts. In an optimum circuit, with about 800V plate voltage, a pair of EL34s in Class A can produce about the same output as can the original ST70. Unfortunately, that "optimum circuit" demands an utterly complete redesign of the ST70, and is not suited to a modification.

The big problem with Class A operation is efficiency; the process is simply not capable of converting more than about 30% of available energy to output, whereas the Class AB amplifier is about 55% efficient.

In Class B operation, each tube is "cut off" when the signal voltage reaches the bias voltage, and the other tube takes over for that half of the cycle. This shifting from one tube to the other can cause either notch or crossover distortion, if the output transformer is not designed with a sufficiently tightly coupled primary winding. McIntosh avoided this problem by using a bifilar winding, which provides extremely tight coupling indeed.

The general procedure for converting a Class AB amplifier to Class A operation is complex, but worth the effort. Increase the capability of the power supply by at least tripling each of the two capacitors in the filter section, and switching the choke to one capable of twice the current flow with good filtering. Any increase in available voltage should be sought. In fact, at least 800V for most of the EL34 amplifiers is recommended. Check the Tube Manual for the maximum permissible B+ appearing at the plate of the tube, and add 10% for losses through the primary winding of the output transformer. The KT88, however, works well with 365V on the plate and 200 ma current flow. If the power supply can provide the 400 ma required, at about 400V, that will suffice.

The next step involves rebuilding the bias supply to provide a stable but much lower negative grid bias, as required to provide the (midpoint in adjustment) values indicated below:

Tube	Available B+	Bias	Current Flow Per Tube
KT88	400V	-9V	200 ma
EL34/6CA7	800V	-10V	150 ma
EL34/6CA7	400V	-13V	125 ma
7027A	250V	-14V	72 ma
7355	500V	0V	100 ma
6BQ5	300V	0V	65 ma (draws grid current)
7189	400V	-7.3V	48 ma

Obviously, the conversion of most equipment to Class A operation requires considerable technical expertise. For the relative novice, however, a simpler approach will work. Reduce negative bias voltage to increase current flow until the rebuilt or augmented power supply indicates strain (120HZ hum in audio output). Reduce current flow (increase negative bias voltage) slightly, and attempt operation at that point. Output power will be reduced, but at reasonable levels performance should be superb.

The experimenter will probably consider the conversion to triode Class A. Such a modification will probably entail a reduction in available power of at least 60%, with a strong likelihood that ultimate power available will be about 25% of the original value attained with pentodes in Class AB.

notes

chapter twelve

other interesting circuits!

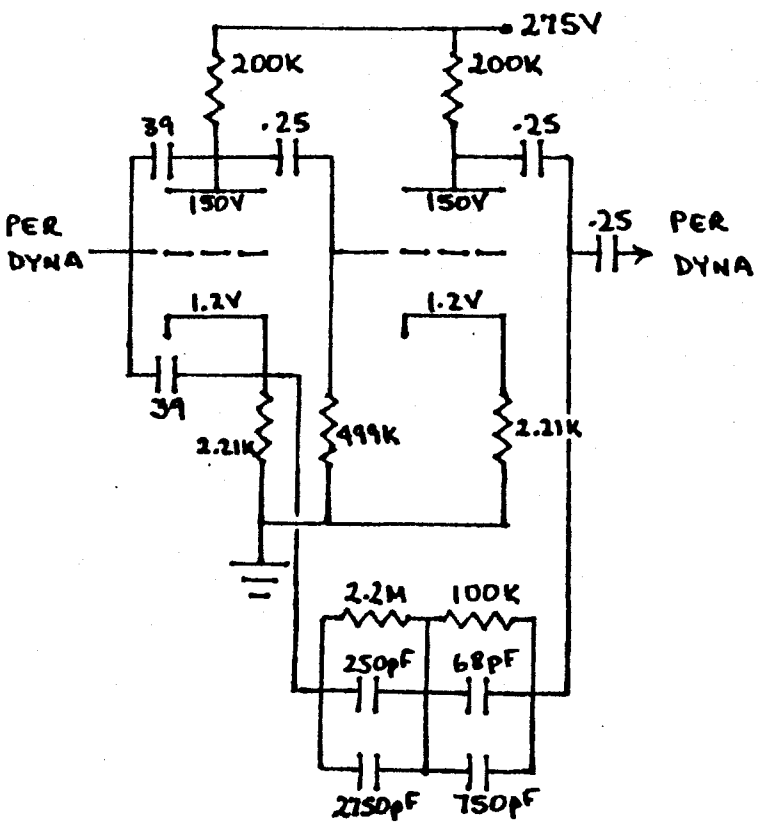

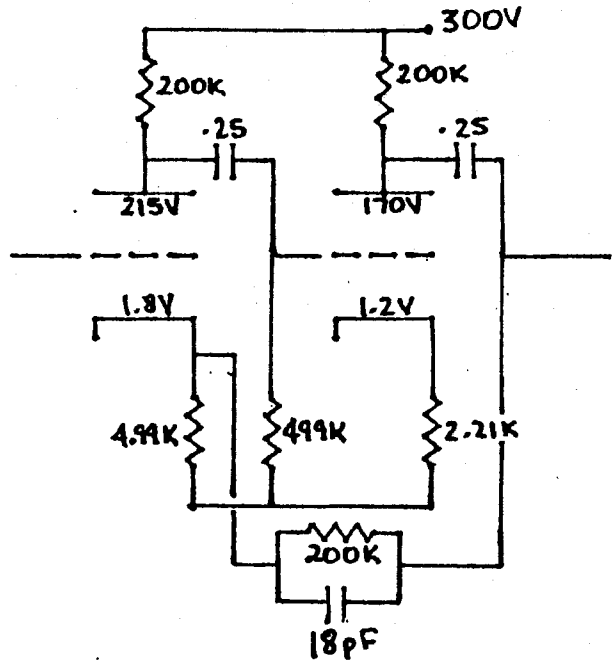

TONE CONTROLS,
COSMETICS,
SWITCHING,
POTENTIOMETERS,
FILAMENT CIRCUIT,
ALL PER DYNACO.

THE SEVERNA PARK, MARYLAND, PAS CIRCUIT

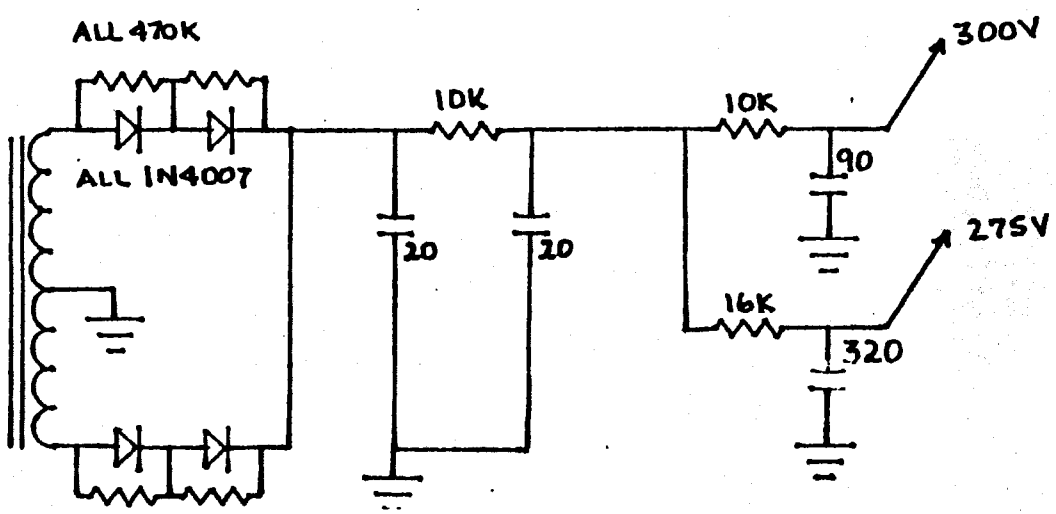

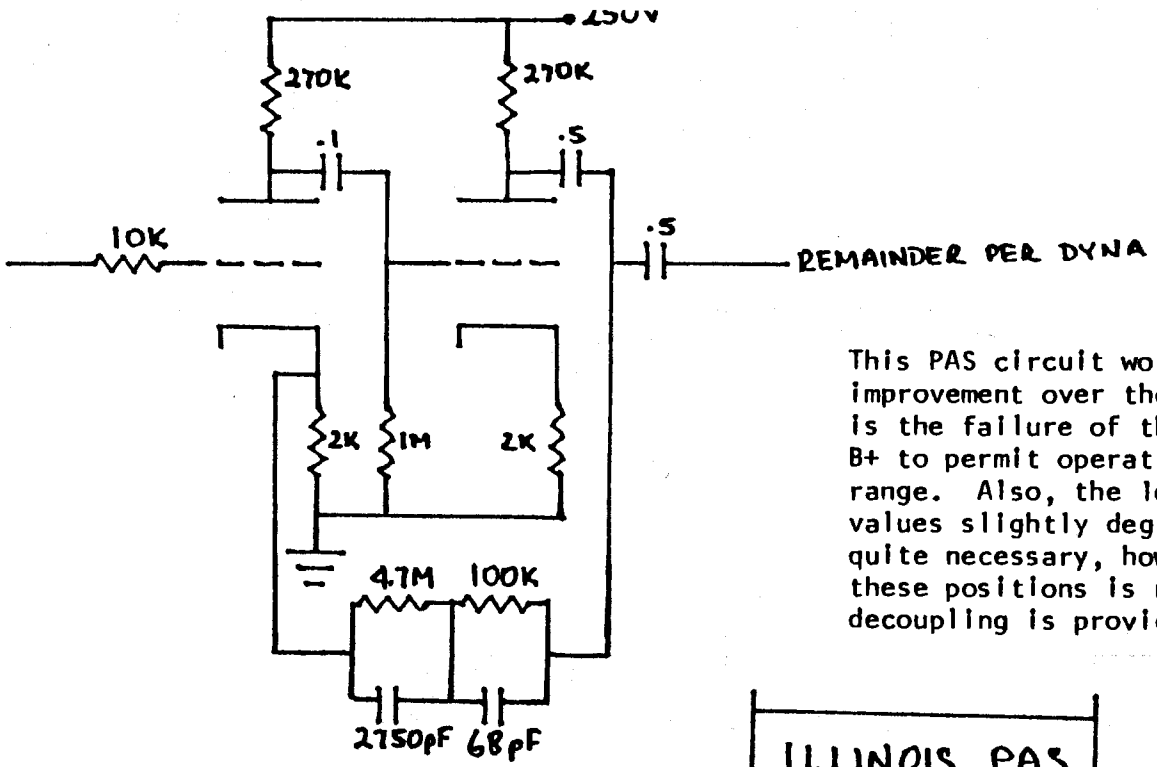

This PAS circuit works well, and is a definite improvement over the original. The major deficiency is the failure of the circuit to provide sufficient B+ to permit operation of the tubes in their optimum range. Also, the lower blocking/coupling capacitor values slightly degrades low end response. They are quite necessary, however, since use of 1.0 mfd in these positions is not possible unless much better decoupling is provided in the power supply.

ILLINOIS PAS

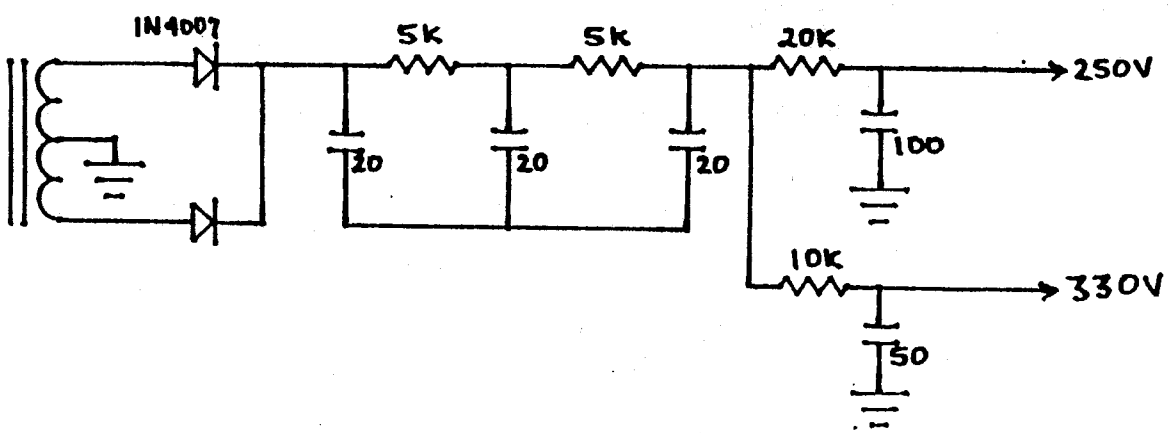

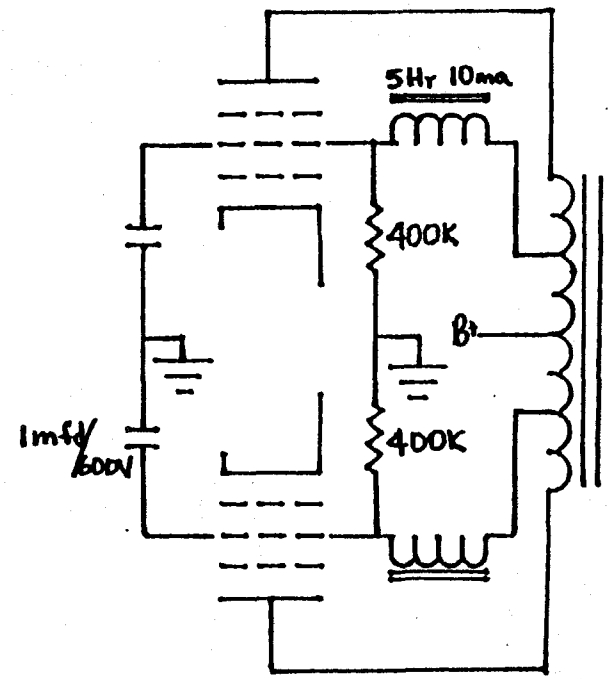

The chokes help stabilize screen grid voltage, since the resistors ensure a constant current flow through the choke. It is likely, in some cases, that the performance of the unit will be degraded through this approach unless the screen grid supply is totally isolated from the output transformer. In other cases, the presence of the choke and resistor will improve performance. The determining factor is the necessity of the degeneration occurring across the first 18-20% of the primary.

A GOOD OUTPUT STAGE MODIFICATION APPLICABLE TO MANY COMMON AMPLIFIERS, INCLUDING ACROSOUND, HEATH, FISHER, AND SCOTT.

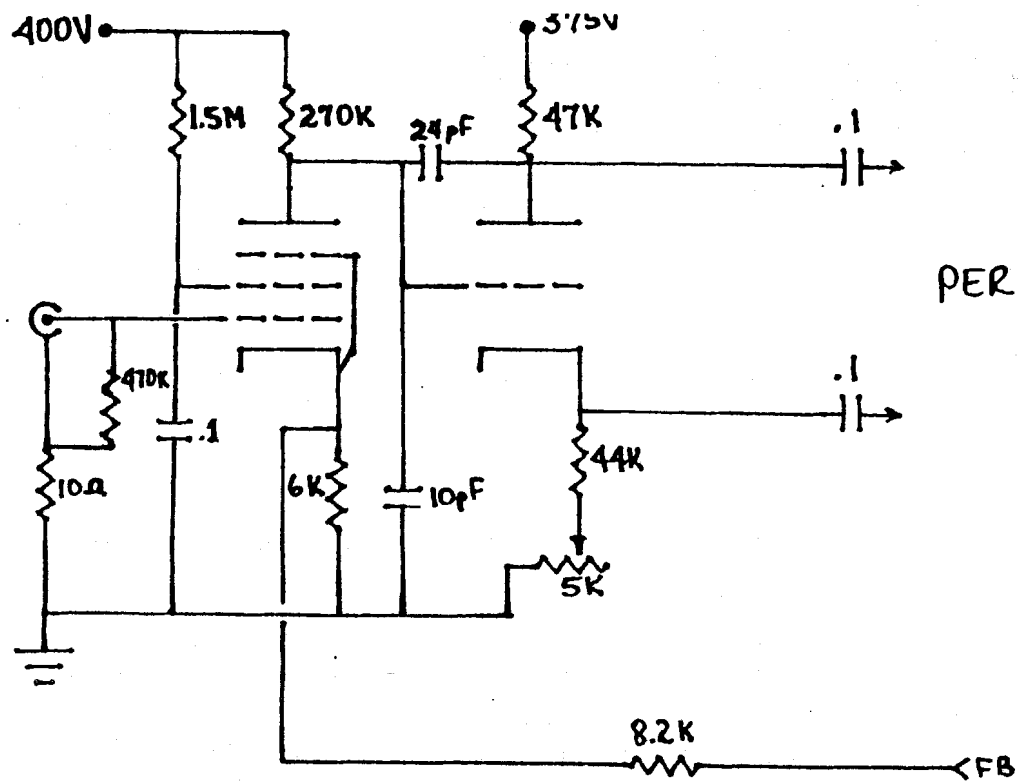

This ST70 modification is a minor improvement over the original; headroom is increased in the earliest stages, and the elimination of capacitors in the feedback circuit helps also. The addition of an AC balance control is of considerable value, though test equipment is necessary to take advantage of the addition.

A WISCONSIN STEREO 70 MOD

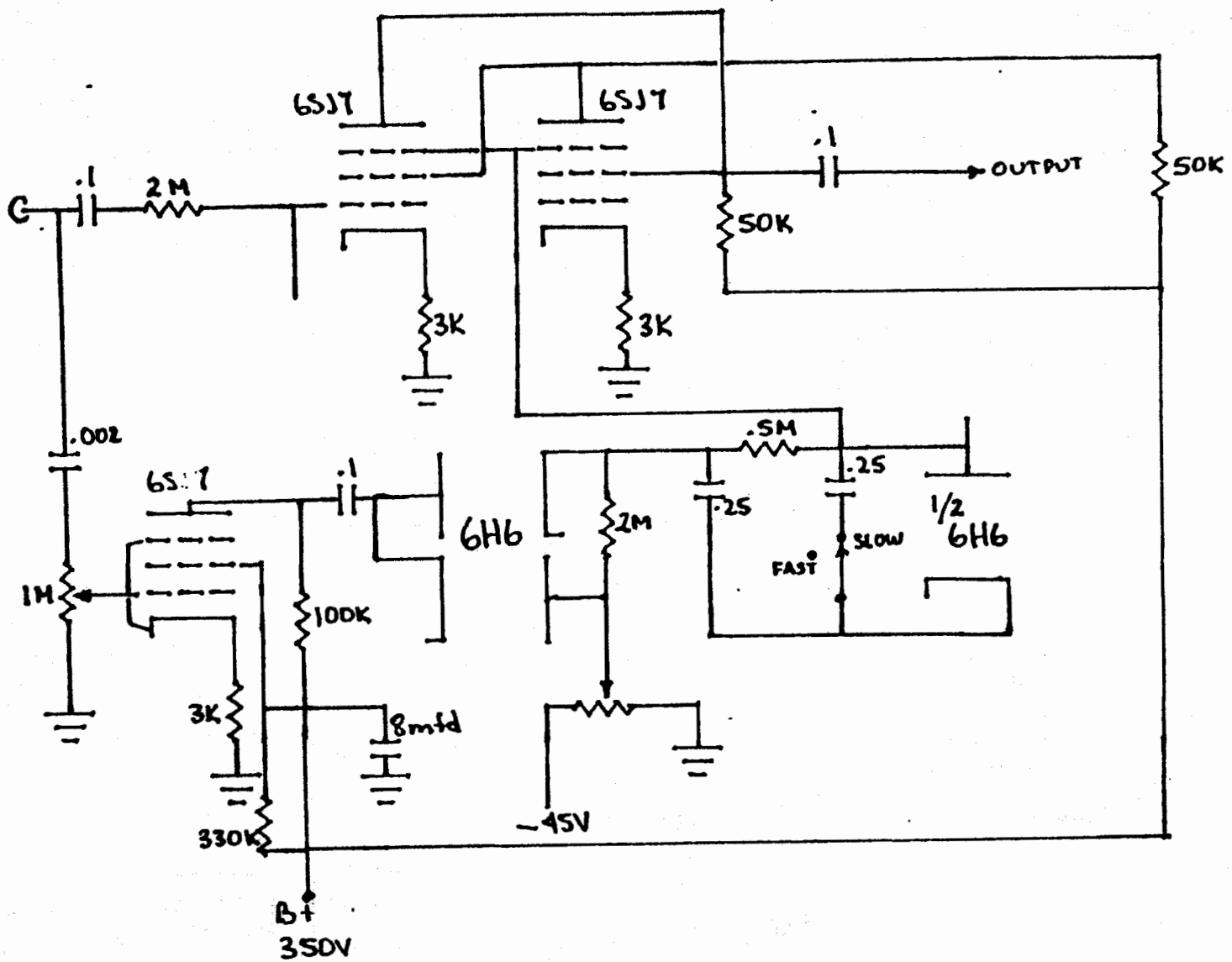

VACUUM TUBE DYNAMIC EXPANDER CIRCUIT

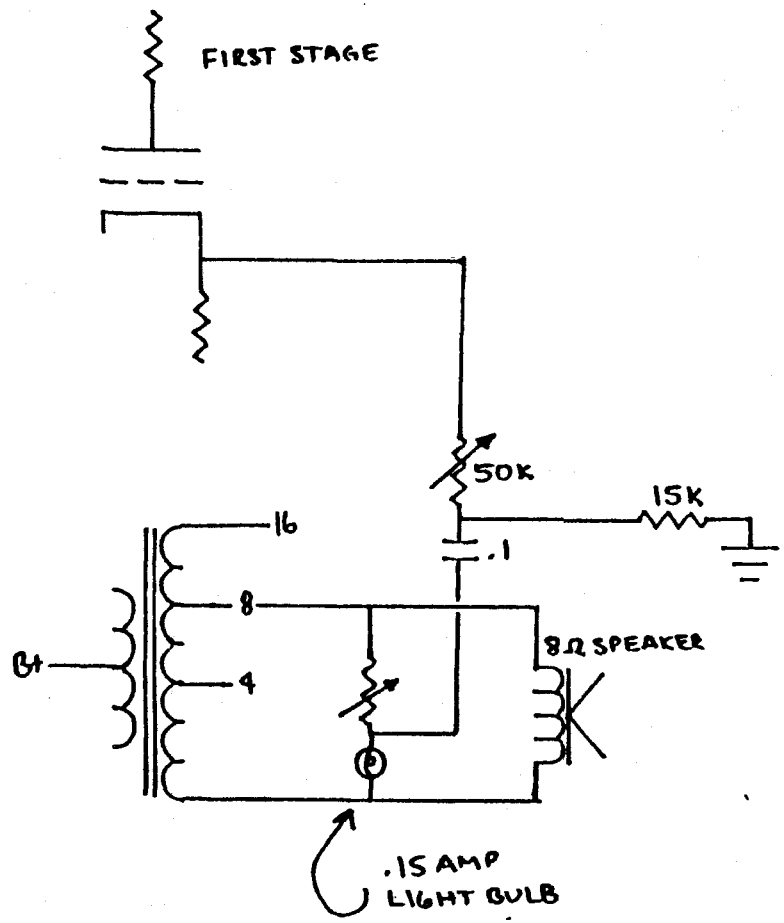

Before the advent of integrated circuitry, this technique was used to augment the dynamic range of a system. It still works!

Circuit values are non-critical, and the entire network can be switched in and out without hazard to the remainder of the amplifier.

The variable resistor in series with the lamp filament is selected to be about twice the impedance of the voice coil.

The most effective application of this circuit is in a bi-amplified system, in the high frequency amp.

LAMP-TYPE DYNAMIC EXPANDER

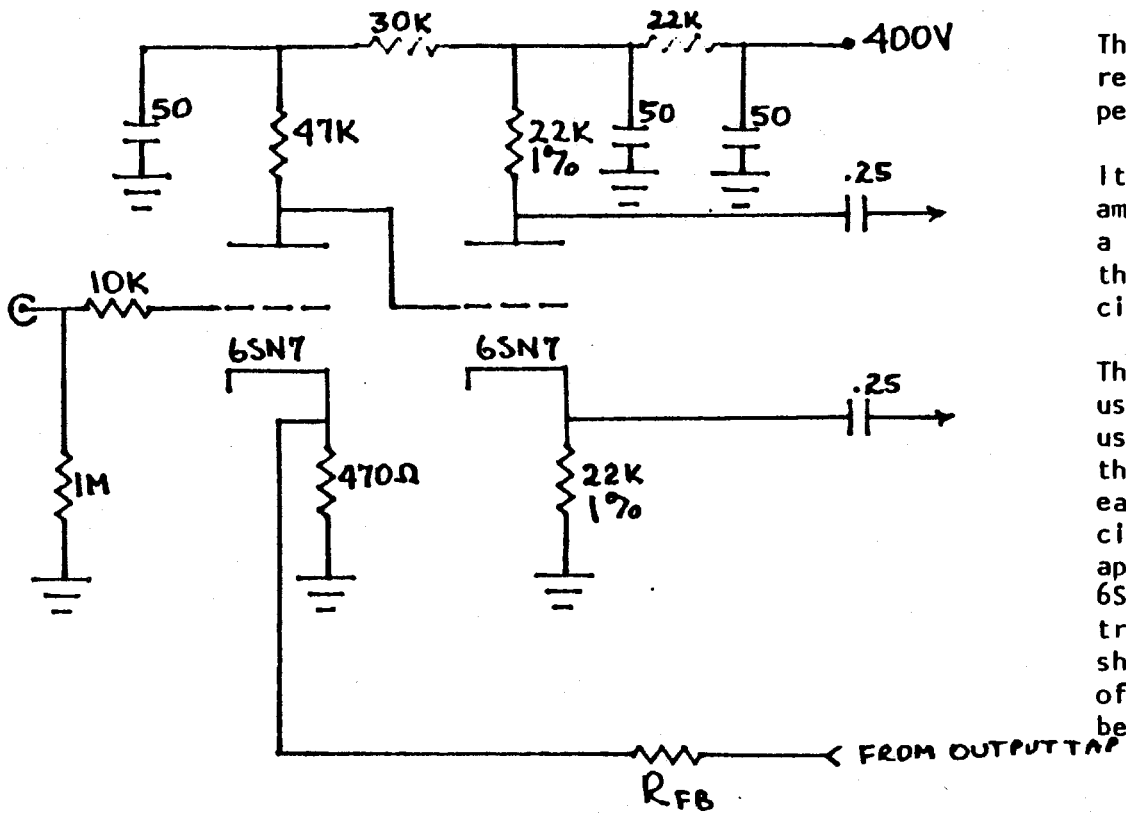

This circuit can be used as a replacement for conventional pentode voltage amplifiers.

It is suitable for almost any amplifier built, and provides a definite improvement over the typical 6AN8 or 7199 circuit.

Though a circuit board could be used, it is more easily incorporated using point-to-point wiring. In those amplifiers using PCB for the early stages, simply replace the circuit board with sheet metal, appropriately punched out for the 6SN7. In some cases the original triode or paraphase phase inverter should be retained; in others, any of the 'good' phase inverters can be built from scratch.

$$R_{FB} = 1200 \times \sqrt{\text{SPEAKER IMPEDANCE}}$$

ALL-TRIODE VOLTAGE AMPLIFIER AND PHASE INVERTER CIRCUIT

notes

notes

CARTRIDGE MOUNTING

The cartridge must be installed in a manner which will place the top surface parallel with the disc when the stylus is in the groove. This criteria is almost as important as stylus pressure, and is almost universally ignored. Further, the cartridge should be checked for verticality; any lateral tilt will destroy stereo imaging and/or channel balance.

ARM DAMPING

Many authorities agree that a small paddle attached to the arm and resting in a bath of STP will greatly improve arm performance. As a result of an article in a popular high fidelity magazine, many audiophiles have employed this technique, with varying results. The biggest problem appears to arise when the paddle is mounted with an arm of excessive length, or of resonant material. Another technique, equally successful in many cases, consists of the addition of a small amount of high temperature silicone based (highly viscous) lubricant to knife edge or axle-type bearings.

TURNTABLE SUSPENSION

The possibility of mechanical feedback, from the speaker to the turntable platform, exists whenever the turntable rests on other than a cement deck. Such feedback can be insidious; it is not obvious, but seriously affects definition of the low end. In some systems which include an equalizer, addition of a good seismic platform will cause such a substantial change that re-equalization of the lowest two octaves will be necessary. Acoustic feedback can be reduced by the addition and use of a plastic cover. Severe cases can be helped if mass, in any form, is added to the cover. Two coats of automobile undercoating, covered with a layer of decorative cloth, can be applied to the inside.

CABLES AND WIRING

Low capacitance cables, as short as possible, can provide an immediate discernable difference in an all tube, high impedance system. Hum can often be reduced or eliminated by some combination of grounding wires; experimentation may take hours, but the result is worth the effort. Speaker leads should be the heaviest available. For distances over ten feet, use 12 gauge wire.

EXTERNAL POWER SUPPLIES

The only way to completely eliminate AC hum from a preamplifier or amplifer is to ensure that no AC (other than the audio signal) reaches the inside of the component. A major modification effort might include removal of all AC items and the construction of an "outboard" power supply. There is another application of the "outboard" technique. Most units simply do not have sufficient space for the inclusion of really massive electrolytic capacitors, yet such caps can be purchased at reasonable prices from many surplus outlets. If the builder fits the chassis with a Jones plug, and uses an external chassis, he can include truly huge electrolytics in his circuit. One thousand mfd at 450V is a fairly common capacitor, but it is larger than a 16 ounce beer can. Though three or four of these caps are far too large for inclusion in a chassis, it is possible to build an outboard chassis which will house them. Wiring and plugs must be extremely well insulated, of course, and such cans can only be used with tube rectifiers, because they act just like a dead short when they begin charging.

SYSTEM PHASING

If the (magnetic) cartridge is wired with one (say the right) channel reversed (red wire to green terminal, green wire to red terminal), the system will be out of phase. That condition can then be rectified by switching the wires to the right speaker (hot to ground, vice versa). The result of this apparent exercise in stupidity is that the two signals will go through the system out of phase with respect to each other.

That means that any instantaneous peak will be seen as negative by the electronics of one channel and positive by the other. Electronically, the result will be less effort on the part of the power supply, which will have to support only one channel going positive and one channel going negative at any given moment. Also, in those units which use a single tube carrying both signals at any point in the circuit (and there are many), the two signals will be out of phase as they go through that tube, and interference will be less. The sonic improvement can be quite remarkable.

LOUDSPEAKERS

Every high frequency unit can be affected by diffraction from any hard, angled edge in the vicinity of the speaker (whether dome, cone, piezo, horn or electrostatic). This can cause slight diffusion and a reduction in precision of stereo imaging. Solve the problem by adding a quarter inch of felt to each such edge in the vicinity of the driver. Reduce interaction between drivers by separating any two with a strip of such felt applied to the front of the enclosure (behind the grill cloth, of course).

CROSSOVERS

Electronic crossovers of the vacuum tube variety are rare. A few were marketed by Marantz and Heath; only ARC produces any now. The older units can be improved only slightly by applying the same techniques to their power supplies as have been discussed in this text. Replacement of carbon composition resistors with metal or carbon film resistors will help also, as will replacement of 10% capacitors with components of closer tolerance. Passive crossovers (in the speaker enclosure) can sometimes be improved by referring to a reactance chart, buying capacitors of the appropriate value, measuring them carefully, and then winding matching coils by hand.

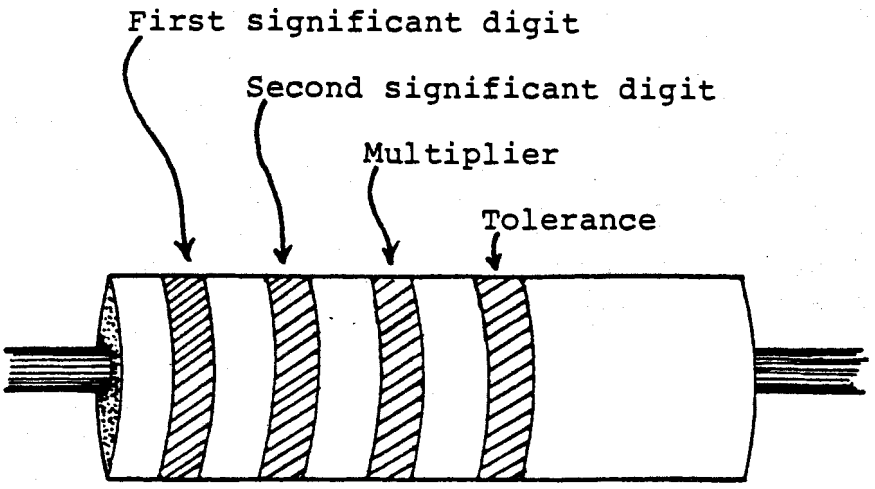

Resistors with black body color are non-insulated carbon composition.

Resistors with colored bodies are insulated.

Wirewound resistors have the first digit color band double width.

COLOR	DIGIT	MULTIPLIER	TOLERANCE (±%)
Black	0	1	-
Brown	1	10	1
Red	2	100	2
Orange	3	1000	3
Yellow	4	10000	4
Green	5	100000	-
Blue	6	1000000	-
Violet	7	10000000	-
Grey	8	100000000	-
White	9	1000000000	-
Gold	-		5
Silver	-		10

APPENDIX C

SOURCES FOR TUBE-PECULIAR PARTS

INTERNATIONAL ELECTRONICS UNLIMITED Post Office Box 3036 Monterey, CA 93940	PRECISION RESISTORS MYLAR CAPACITORS
DELTA ELECTRONICS Post Office Box 2 Amesbury, Mass 01913	PRECISION RESISTORS SOME ELECTROLYTICS METERS
POLY PAKS Post Office Box 942 Lynnfield, Mass 01940	ALMOST EVERYTHING WHEN THEY HAVE IT!
CORNELL 4217 University San Diego, CA 92105	TUBES
WALTER'S 2697 Nickel San Pablo, CA 94806	TEST EQUIPMENT
BROOKS RADIO & TV CORP. 529 Columbus Avenue New York, New York 10024	DIPPED MYLARS ELECTROLYTICS SOME CHOKES
OLD COLONY Box 243 Peterborough, NH 03458	CIRCUIT BOARDS AND KITS FOR SPECIAL AUDIO PROJECTS
EDI 4900 North Elston Avenue Chicago, IL 60630	ALMOST EVERYTHING!
ELECTROVALUE AMERICA Post Office Box 337 Peterborough, NH 03458	ONE OF THE VERY BEST SOURCES OF ALL, FOR ALMOST EVERYTHING!
EDLIE ELECTRONICS, INC. 2700 Hempstead Turnpike Levittown, NY 11756	TUBES, CAPACITORS, RESISTORS, ETC. ETC. OCCASIONAL CHOKES
DAUGHERTY AUDIO SERVICE 7313 Inzer Street Springfield, VA 22151	SERVICE MANUALS AND SCHEMATICS
KNAPP 3174 8th Avenue, SW Largo, Fla 33540	TRANSFORMERS, CHOKES, MISCELLANEOUS
ANKER ELECTRONICS 1617 South Main Street Wilkes-Barre, PA 18703	ABSOLUTELY EVERYTHING!

ANKER ELECTRONICS (WEST COAST DIV.) 4470 7th Avenue San Diego, CA 92101	ALMOST AS GOOD....
TRANSLETERONIC, INC. 1365 39th Street Brooklyn, NY 11218	TUBES
TEMTRON ELECTRONICS (NY) 1-800-221-8376	MATCHED PAIRS AMPEREX, GENELUX, ETC. ETC. TELEFUNKEN 12AX7
ELECTRONICS EMPORIUM INTERNATIONAL 7895 Clairemont Mesa Boulevard San Diego, CA	TRANSFORMERS, CHOKES, CAPACITORS, RESISTORS
S. J. WALLACE 201 McMasters Drive Monroeville, PA 15146	TUBES (THE BEST!)

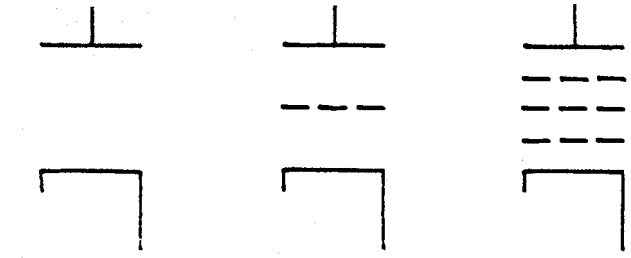

DIODE TRIODE PENTODE

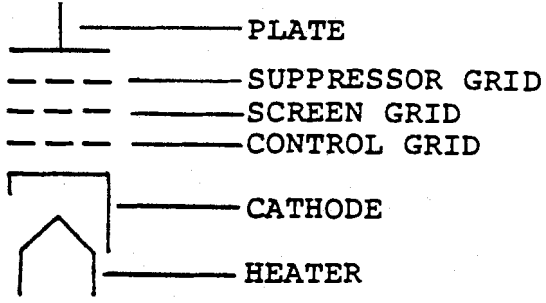

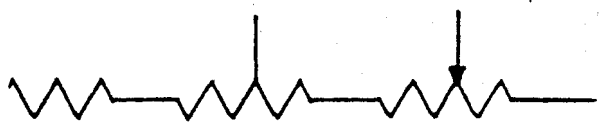

SISTOR TAPPED RESISTOR VARIABLE RESISTOR (POTENTIOMETER)

CAPACITOR (CURVED LEG ONCE SHOWED LOWER POTENTIAL)

ELECTROLYTIC CAPACITOR, WITH POLARIT

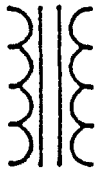

ANSFORMER

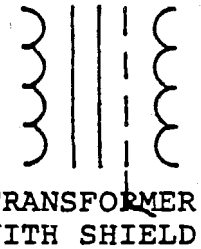

TRANSFORMER, WITH SHIELD

AIR-CORE CHOKE

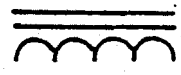

IRON-CORE CHOKE

TAPPED CHOKE

ASSIS OUND

CIRCUIT RETURN

BATTERY, OR ANY DC SOURCE

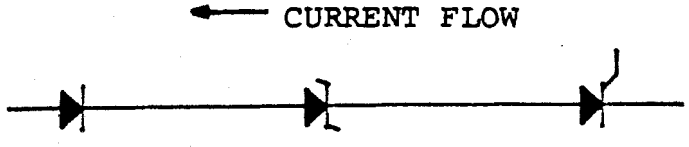

DIODE ZENER DIODE SILICON CONTROLLED RECTIFIER

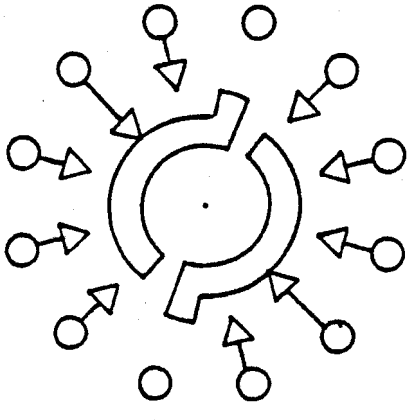

WAFER SWITCH

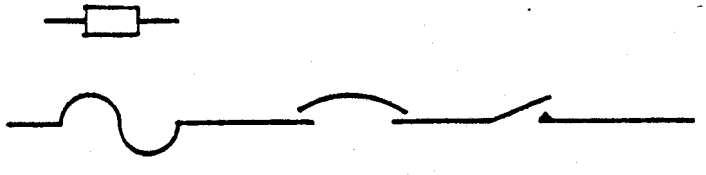

FUZE (EITHER) CIRCUIT BREAKER SIMPLE SWITCH

APPENDIX D: SCHEMATIC SYMBOLS

APPENDIX E: NUVISTOR APPLICATIONS

The Nuvistor was developed by RCA to satisfy primarily military requirements for extremely low noise vacuum tubes.

Each nuvistor consists of a triode in an extremely small metal can measuring less than one inch above the socket. B+ voltages can be quite low; a typical circuit would require about 200V at 40 milliamperes for the four tubes required for a stereo subpreamplifier. Filament voltage requirements vary from 2V to 13V; DC is mandatory!

Nuvistors are available new or on the surplus market. New units, from retail outlets, are extremely expensive. Surplus nuvistors are readily available, though most are marked with military identifiers. A substitution manual, or the RCA Nuvistor Applications pamphlet, is a primary requirement.

In audio, applications include pre-preamplifiers, either linear or pseudo-cascode, preamplifiers, drivers, voltage amplifiers or phase inverters in power amplifiers. The nuvistor is extremely linear when used in a properly designed circuit, though most will draw a lot of current.

One circuit used with considerable success is shown below. The author has no idea of the 'civilian' equivalent of the tube shown, since filaments seem to require about 4V. Performance characteristics are listed below the schematic.

NUVISTOR SUBPREAMPLIFIER

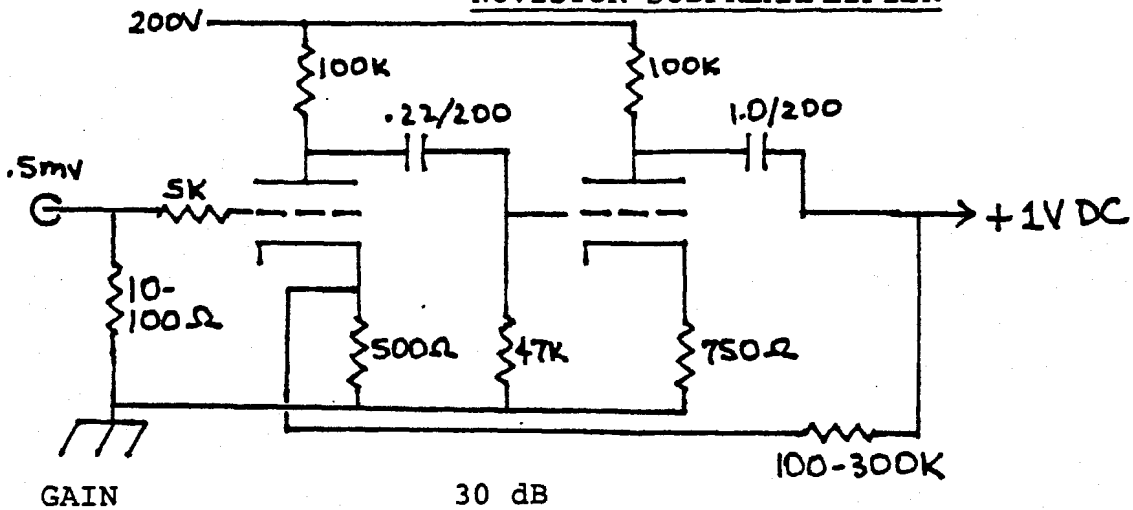

GAIN	30 dB
NOISE	.2 mv
DISTORTION	unmeasurable
OVERLOAD	1V !!
RISE TIME (TO 10 mv)	.6 us
SONIC CHARACTERISTIC	EXCELLENT

BIBLIOGRAPHY

SAM'S PHOTO FACTS

These schematics are a must! Fortunately, they are available at the Science and Industry section of any large public library.

RCA RECEIVING TUBE MANUAL (CURRENT EDITION)

This book begins with elementary tube theory and continues into some rather sophisticated applications. Nearly all tubes, discontinued and current, are described in great detail. The book is essential to anyone modifying tubed equipment, as it presents all tube parameters.

BASIC ELECTRONICS GLADE W. WILCOX HOLT 1960

Begins with fundamentals and basic concepts and continues through a multitude of applications, audio and otherwise. The chapter on power supplies is especially useful to the technically inclined audiophile.

ELECTRON TUBE CIRCUITS SAMUEL SELLY McGRAW-HILL 1950

Not for the beginner! Chapter 6, on untuned voltage amplifiers, is very useful to the preamplifier designer. The vacuum tube pre-preamp circuit (a series balanced DC amplifier) can be found on page 121.

PRINCIPLES OF ELECTRON TUBES HERBERT REICH McGRAW-HILL 1956

Also too advanced for the beginner, but has an excellent explanation of analysis and design of amplifiers.

ELECTRONICS AND ELECTRON DEVICES A. L. ALBERT MACMILLAN 1956

Outstanding presentation on power supplies, but insists that tubes are anachronistic.

AUDIO CYCLOPEDIA H. M. TREMAINE SAMS 1973

If the audiophile can only own one book, this is it! Utterly everything you ever wanted to know about audio...etc. A big book which looks impressive on the coffee table. Reads like a magazine and will probably spend most of its life in the bathroom.

RADIO HANDBOOK WILLIAM ORR SAMS 1972

Excellent, but limited to a few audio applications. Do not buy it, but find it in the reference section of the library.

LOUDSPEAKERS G. A. BRIGGS WHARFEDALE 1948

The world's foremost authority on loudspeakers. Hard to find, but worth the effort. If you locate one, don't lend it!

HIGH FIDELITY SYSTEMS ROY ALLISON AR LIBRARY 1962

A classic, written by one of American's foremost audiophiles. Hardly current, but still one of the very best explanations of high fidelity.

REPRODUCTION OF SOUND EDGAR VILLCHUR AR LIBRARY 1962

Another classic, written by the man responsible for the invention of the first successful acoustic suspension loudspeaker. Excellent, yet simple, explanation of amplifiers, feedback, distortion, etc.

UHF PRACTICES AND PRINCIPLES A. LYTEL RIDER 1953

Less than ten percent is useful to the audiophile, but that small portion of this slim text covers everything there is about high frequency reproduction with vacuum tubes.

ACOUSTIC MEASUREMENTS L. L. BERANEK WILEY & SONS 1949

Though not aimed specifically at the audiophile, this book is of extraordinary value in solving acoustic problems, such as transducer coupling.

BASIC RADIO J. B. HOAG D. VAN NOSTRAND 1942

Simple and useful at every level. Assumes nothing, yet covers everything up to very advanced (for 1942) circuitry.

ELECTRONICS FOR ENGINEERS MARKUS & ZELUF (ED) McGRAW 1945

Extracts from Electronics magazine. Section 4, on audio circuit design, is very useful. Included is a circuit for a vacuum tube equalizer!

HOW TO TEST...ALMOST EVERYTHING ELECTRONIC JACK DARR TAB 1966

Just what the title says - important to the audiophile with a meter.

Audio Dimensions 8898 Clairmont Mesa Blvd. #K San Diego, California 92123
tel. (714) 278-3310

to our readers....

The Vacuum Tube Electronics Modification Manual will be continuously updated, a process which will depend heavily upon reader experience and correspondence. AUDIO DIMENSIONS PRESS will issue bi-monthly bulletins reflecting reports received from readers, new circuitry and procedures, additional sources for components, and much more. When appropriate, replacement pages will be furnished; the original manual is looseleaf bound to facilitate insertion of new pages.

The first such update is included with this letter. It provides an errata sheet for the manual (sorely needed) plus several ideas worth considering. The next update will include applications of the 8417 beam power tube, more Nuvistor circuits, a major modification for the new Dynaco MKVI, and more. Subsequent updates will include information on test equipment and procedures, commentary regarding available modification services, and reader input.

A subscription fee of $10 has been set for the first six bulletins, to be issued every other month beginning December 1976.

A consultation service is available (at no charge) to the original purchasers of the manual. To exploit this opportunity, the reader is requested to provide the information listed below, plus a stamped self-addressed envelope.

1. Schematic of the component being modified, plus schematic of the proposed result.

2. Detailed list of the parts used at every point in the schematic.

3. Identification of the equipment with which the component is being used.

4. Voltage/resistance readings at significant points in the circuit.

5. Description of any problems encountered.

AUDIO DIMENSIONS apologizes for the many typographical errors in the manual. While corrections to simple spelling and punctuation mistakes are left to the reader, the errata listed here are important to the use of the manual.

PAGE	STEP/ FIG/ LINE#	CORRECTION
26	37	should read "...to the primary of the transformer, and the speakers to the secondary."
71	11	should read "Approximate filament voltage..."
75	Fig 14	upper circuit feedback should read "0 - 47 pF"
84	Fig 19a	voltage beside zener string should read "380V total"
86	Fig 20	all electrolytics in the filament circuit should be 10,000 mfd.
105	Step 1	after "...loops." add "and R68 (301k).
106	Step 1	after "1.0 electrolytic", add "(present in some units)"
107	Fig 28	add 10 - 50 pF from midpoint of EQ circuit to ground
109	Step 21	should read "between solder points 8 and 9, 2 and 3"
109	Step 26	delete (redundant with Step 40)
110	33	add: "insulated from the chassis at that point, but wired to power supply ground at the main filter capacitor"
116	25	should read "...four milliamperes will suffice..."
128	35	add "prior to the choke"
156	Fig 48	cathode resistor in pentode stage should be 680 ohms
158	Step 17	add "...and jacks (optional) as shown in the schematic."
158	Step 20	add "...measure voltage across control grids with no signal present, and balance with 5k pot. If jacks are installed, set actual current flow with both pots.
158	Step 5	add "...or tap main power supply after the filter choke to build semi-independent screen grid voltage source."
159	7	add "...(if separate bias provision is not present)."
161	Step 10	add "...or use 4 1N4007 diodes as shown in Figure 5."
164	Step 30	should read "...between pin 6 and pin 1..."
165	10	should read "...see Figure 50."

GOOFS tu-be or not tu-be

update 1

november 76

PREAMPLIFIERS

Many phonograph cartridges are sensitive to the load imposed upon them, which is reasonable since all magnetic cartridges are, in essence, generators. As such, they must produce the most linear (RIAA considered) output when loading is optimum. The "load" consists of two parts; the purely resistive load imposed by the input load resistor of the preamplifier, and the capacitance caused by the tone arm wiring, cables, and input circuitry of the phono stage. Though industry long ago standardized the resistive load at 47,000 ohms, no two firms have agreed on an optimum capacitance. Some cartridges will sound different as the capacitive load changes, and in those cases the difference can be quite significant. Connecting cables vary greatly in capacitance; even "good" ones can impose a load as high as 40 pF per foot. The best available today measure only 12 picoFarads per foot. Most serious audiophiles are quite careful in selecting cables, under the assumption that the lower the capacitance the better the performance, though differences are slight.

Unfortunately, proper operation of several cartridges is dependent upon a specific capacitive load, and the acceptable range is quite narrow. The Shure V15IIIG (the conical stylus unit promoted by Pro-Musica and considered by some to be "state of the art") seems to operate at its best when the total load imposed by cable, tone arm, and input circuitry is 47,000 ohms plus 250 pF. A typical arm/cable/input circuit in today's audiophile market will total something closer to 100 pF. Obviously, something must be done to ensure compatibility between such cartridges as the Shure and the equipment with which it is to operate.

Since only an accurate capacitance bridge can measure the existing load, and most audiophiles are not equipped with such a device, some means must be added to the system to compensate for the subtle incompatibility between some fine cartridges and potentially outstanding preamplifiers. Trial and error would work, eventually, but the best load for one cartridge might not suit another. There is a more elegant solution, which depends upon the number of phono inputs on the preamplifier itself. One simply builds in a different capacitive load on each pair of jacks. The Ultimate PAS, for instance, has three pair of jacks. Try 60 pF on one pair, 200 pF on another, and leave the third for those cartridges which operate best into a minimum capacitive load. At least one of the inputs, then, should be near optimum for nearly any cartridge used. On many preamplifiers, the ground terminal of the phono input jacks is wired to chassis or circuit ground through a small resistor - usually about 10 ohms. In such cases, it is imperative that the loading capacitor be soldered directly to the jack itself. The capacitors used should be dipped silvered mica, but need not be close tolerance; ±10% is quite satisfactory. Of course, a simple switch can be used for each jack to vary capacitance. The result, schematically, should look something like one of these.

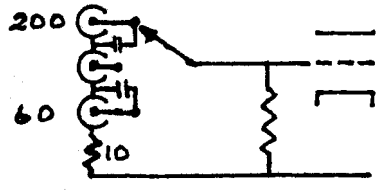

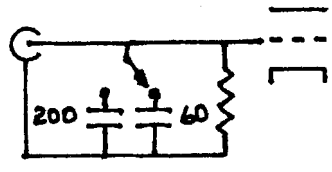

Applications of the Wallman cascode circuit to audio components have proven extremely successful. At least two such units are now on the market, including one excellent product marketed as a kit. Several readers have made suggestions regarding the cascode; they have been incorporated in the circuit shown below. Output impedance is quite high; if a cathode follower is to be used this will impose no limitations on the preamplifier. If no cathode follower is used, decrease the plate load resistor on the last tube to about 100k, and the cathode bias resistor to about 1k. If any "breathing" (slow variations in plate voltage) are noted, add a resistor between the plate of the last tube and the capacitor leading to the feedback circuit.

Several feedback circuits have been used with the cascode, including that shown (taken from page 73 of the manual). Another RIAA network which works well is shown on page 72; its advantage is that it is <u>not</u> a feedback circuit at all, but is passive and operates between stages.

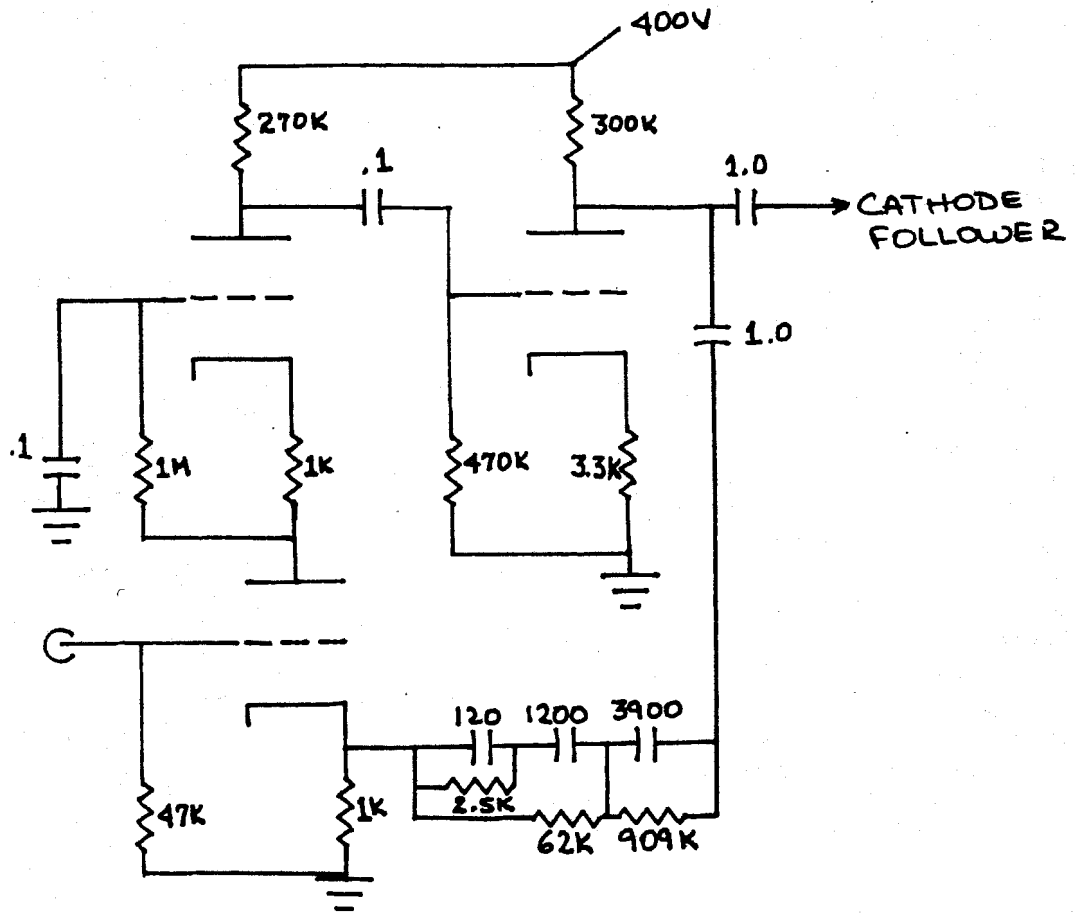

The output stage of a preamplifier operates much as a generator does; as with cartridges (magnetic), there is an optimum load into which the stage will work best. If the circuit is equipped with a cathode follower, output loading is not very critical. If, on the other hand, no cathode follower is used, the circuit recommended by the manual operates at its best when it "sees" a load of about 50,000 ohms. Variations of about 10,000 ohms will have little effect; the difference may be detectable only on test equipment. Larger variations, however, can produce a significant change in the sonic characteristics of the overall preamplifier. A simple addition to the basic circuit permits variation of the load imposed by internal circuitry, in order to make the total load - amplifier input impedance considered - near optimum.

As explained in the text, the total load consists of the reciprocal of the sum of the reciprocals of all loads placed in parallel. This means that if amplifier impedance is 100,000 ohms, then a similar load should be imposed internally, in order that the total load becomes about 50,000 ohms. If amplifier input impedance is 470,000 ohms - typical of tube units - then the internal load should be about 55,000 ohms. Of course, if the amplifier input impedance is quite low, as is the case with many solid state units, then the internal load should be minimized (with a high value resistor). A double pole, double throw switch can be mounted in the vicinity of the output jacks; select a switch with center off rather than one of the on-on variety. Wire the center terminals to the output jacks. Then wire a 50,000 ohm resistor for each channel, from ground to one of the end terminals. A 100,000 ohm resistor is soldered from ground to each of the other end terminals. Finally, any load resistor on the circuit board, or within the circuit, is replaced with one of about 500,000 ohms. This permits matching of a typical tube circuit to several different power amplifiers without rewiring, and greatly increases flexibility of the preamplifier. The circuit looks something like this:

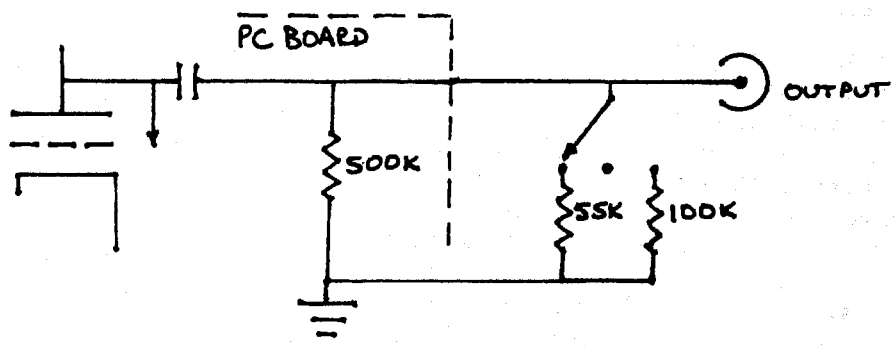

In nearly all preamplifiers, the output from the phono board and from the high level board passes through two capacitors. This is true whether a cathode follower is used or the output is taken from the plate of the last stage. At a point between these two capacitors, the feedback loop begins. The object of this design is cost reduction; only one high voltage capacitor need be used. When cost is not a major factor, and space is available, an easy conversion will improve both low frequency response and phase shift characteristics.

Note the addition of the resistor; this is to prevent any unplanned coupling due to small differences in the capacitors.

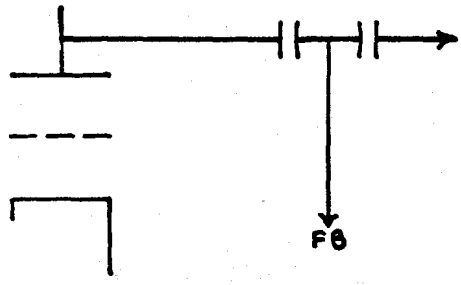

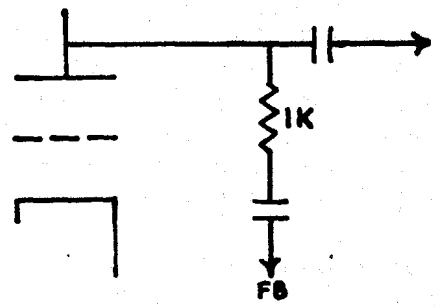

The sonic result of this effort will be a reduction in the low frequency muddiness causes by phase shift, plus an extension of bandwidth by a full octave; the 3 dB point will move from about 4 Hz to about 2 Hz.

AMPLIFIERS

Conversion to solid state rectification reduces heat, provides more space, and is simpler than thermionic rectification. The major disadvantage of such a change is the fact that the diodes will conduct the moment the power is turned on. Because the tubes are 'cold', there will be no current flow, and thus no voltage drop across the chokes and resistors. As a result, there may well be an over-voltage condition at critical points in the circuit. In some cases, the condition may damage capacitors; electrolytics, in particular, are very susceptible to damage from even a slight overvoltage, despite "surge" ratings. This problem can best be solved through use of a delay tube, such as the Amperite. Internally, these tubes contain a heating element (suitable for any of several voltages) and a bimetallic strip. When that strip is heated, it bends, bringing contacts together and completing any circuit wired to them. The tube will get quite warm, and should be mounted above the chassis. If no space is available 'on top', mount the tube under the chassis but drill appropriate ventilation holes. The most suitable tubes use a conventional 9-pin miniature socket, though tubes with an octal base are also available. Careful inspection of the tube will permit determination of the pins which go to the heating element and those which go to the contacts. The first figures on the tube will indicate the voltage requirement of the heating element; a 30% mismatch will not be a problem. The B+ circuit should be broken at the choke. Simply wire the rectifier output to one of the delay tube contacts, and run a wire from the other contact to the first capacitor section to which the choke is wired.

The circuit will look something like this:

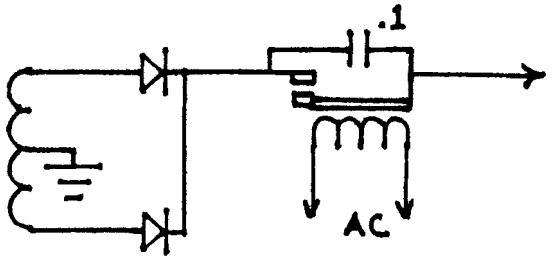

Note the .1 mfd 600V (or more) capacitor wired across the contacts in the delay tube... this is to reduce arcing and noise when the contacts close.

An acceptable alternative is the use of a thermistor in the AC line, after the power switch. Some readers report success with this technique, though the delay provided by the thermistor is not quite enough to completely prevent an overvoltage condition.

NUVISTOR NEWS

One of the few commercially available Nuvistors is the 6CW4, which is still in use in some communications and television receivers. Though relatively expensive (there is only one triode per envelope), this tube has good gain, is extremely quiet, and is very linear. It is suitable in either a sub-preamp or a preamplifier, and in either application the sonic results are excellent. One of several good circuits for the 6CW4 is shown below; more will be published in subsequent Updates.

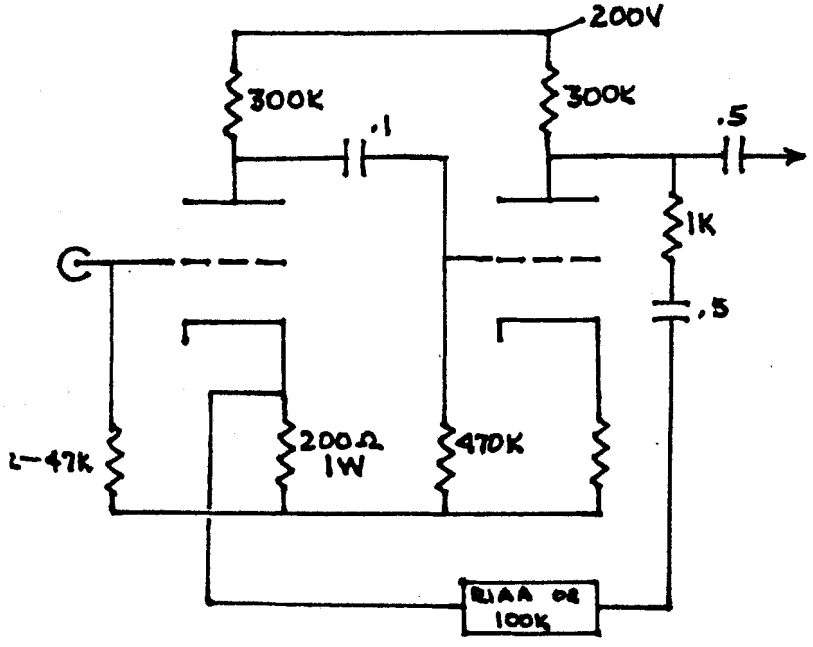

tu-be or not tu-be

UPDATE TWO

Audio Dimensions, Inc.

© JANUARY 1977

REJOICE, YE AUDIOPHILES!! There's a new star in the firmament... a true innovation which threatens to void all existing bets. ADI is euphoric in announcing a spectacular combination of two devices, applicable to the solution of many audio problems.

That "marriage" between a new type of field effect transistor and the oldest types of vacuum tubes promises circuitry performance one whole order of magnitude beyond anything we've seen before. The FET is <u>not</u> used as an amplifying device, but as a current source. The tube remains as the only part of the circuit "seen" by the audio signal.

First, let's consider the FET (about which, fortunately, we needn't know much) when the drain and source are wired together. The result is called a CONSTANT CURRENT DIODE, and is represented by the symbol: 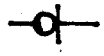

Motorola sells such components as "field effect current regulators", listed as 1N5283 through 1N5314, depending upon desired current flow. They're priced at about $2.50 each. The device acts like an automatic variable resistor; when the voltage across it changes, the unit's resistance changes with it, in order to keep current flow constant. The change is quiet, virtually instantaneous, and extremely accurate. The applications of such a device are many; in vacuum tube amplifier circuits they solve a lot of problems without introducing any new ones.

If the correct current source (CS) is placed between the plate of an appropriate triode and the B+ supply, the characteristics curves of the tube undergo a major change. Suddenly, the triode takes on some of the characteristics of a pentode, without the partition noise which plagues tubes of that sort. Gain becomes equal to about half the amplification factor of the tube, which is just fine if it starts out high enough (the amplification factor of a 12AX7 is 100, in an optimum circuit). There is also an extremely advantageous effect upon the power supply, since there is a <u>constant</u> rather than <u>varying</u> drain on the B+, and much less decoupling is necessary.

Noise is dramatically reduced, since a major contribution to noise is made by any resistor <u>through</u> which the signal flows.

The basic circuit looks like this:

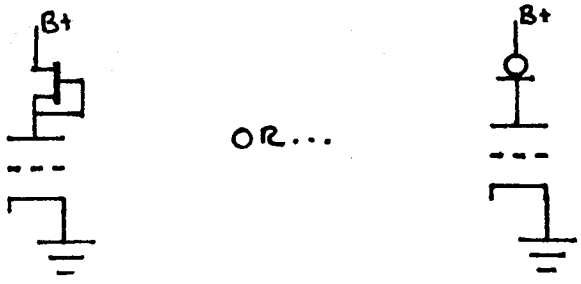

Note that there is no resistor between cathode and ground, and no separate grid bias. That's because this particular tube operates well with zero

potential between grid and cathode, which is an unusual operating point indeed. The example shows a 6CW4 (Nuvistor), which is quite suitable for such applications and is also readily available. In fact, a few frills make the basic circuit an extremely successful sub-preamplifier for moving coil cartridges. Developed by Greg Schug, a member of the ADI technical staff, this sub-preamplifier circuit has proven to be immensely more practical than the original design described in the manual. It requires no sophisticated heater bias, no car battery, and (due to constant current flow) a simple B+ supply. The small size of the Nuvistors makes it possible to build both channels into an extremely small case, with an umbilical running to a separate power supply.

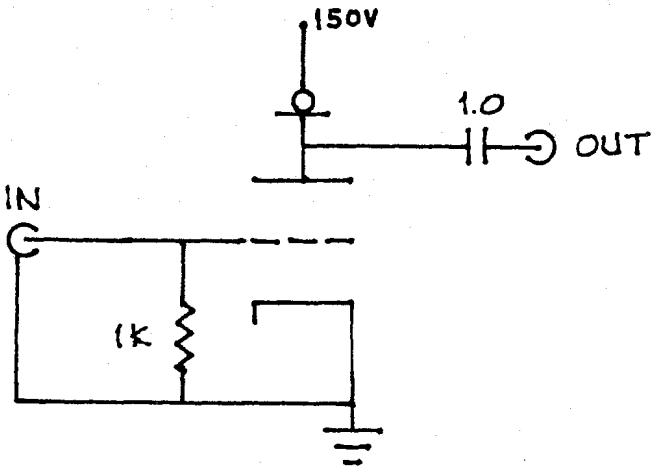

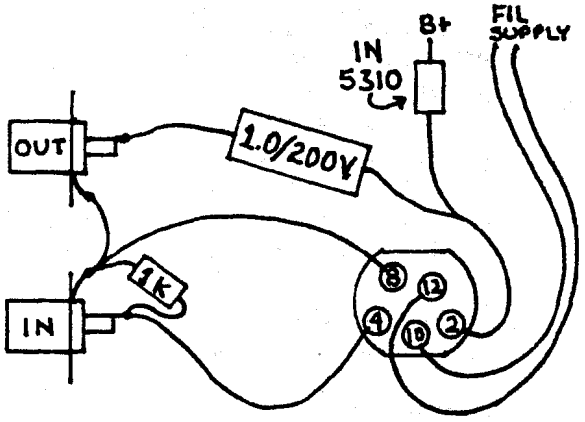

This depicts the circuitry and arrangement of the components for one channel. Note the simplicity of the design, and the ease with which it can be packaged.

Of course, it makes sense to select quiet tubes and quiet current sources, since there is considerable variation from one example to another. The input is directly coupled to the grid of the tube, and loaded with a resistor equal to about ten times the nominal impedance of the moving coil cartridge. With this arrangement, it is mandatory that gain (on the preamplifier) be reduced before removing or inserting the RCA plug.... or you may find a speaker cone across the room from the enclosure.

Obviously, it's a simple matter to add this circuitry to a preamplifier. The small size of the Nuvistors is deceptive, however, since they dissipate a lot of heat. Heat sinks for a TO-5 (transistor) case can be added to each tube. It's important to consider the additional current drain on the B+ supply, since each tube will be drawing about 3.3 ma.

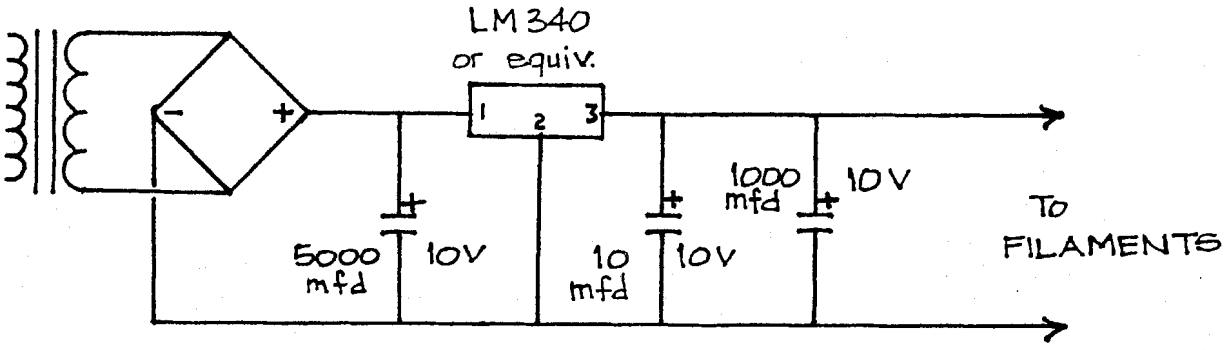

In a few examples, noise was slightly reduced when one side of the filament supply was grounded.

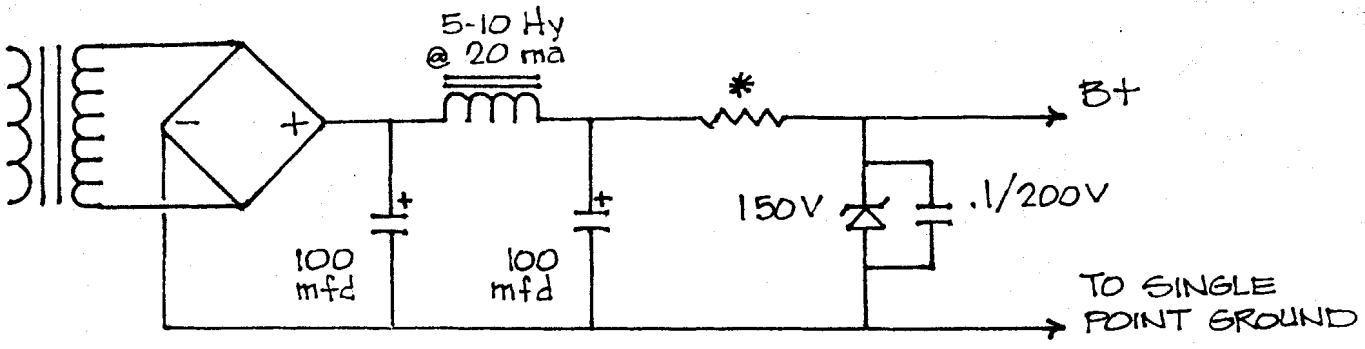

*as required to produce 155-160V before regulation, but 1k minimum

Designing a power supply for the Nuvistor sub-preamplifier is a snap, since it isn't necessary to bias the filament circuits. The schematics above show a simple filament supply and an equally elementary B+ source. The 10 mfd capacitor in the filament supply should be tantalum, but no other special parts or techniques are required.

The constant current concept is equally applicable to many other tubes, including the venerable 12AX7. Consider the effect of substituting a 1N5297 (1 ma) current source for the plate load resistor of your preamp circuit.... Another application would be in cathode followers; use of the CS in place of the cathode resistor would eliminate the major problem plaguing the cathode follower... more on these in the next Update.

PREAMPLIFIER CIRCUITRY

1. The Ultimate cascade...

There's no doubt now, based on reader feedback, that the cascade circuit proposed in the Manual is sonically outstanding, easy to build (in any chassis with a suitable power transformer and space for sufficient chokes and capacitors), stable, durable and economical. Reader response has indicated that the cascade circuit works best without cathode follower, despite the very low distortion introduced by that impedance matching device. Obviously, then, the optimum system employing that circuit will use a tube power amplifier or electronic crossover. Refinements to the basic circuit have been suggested:

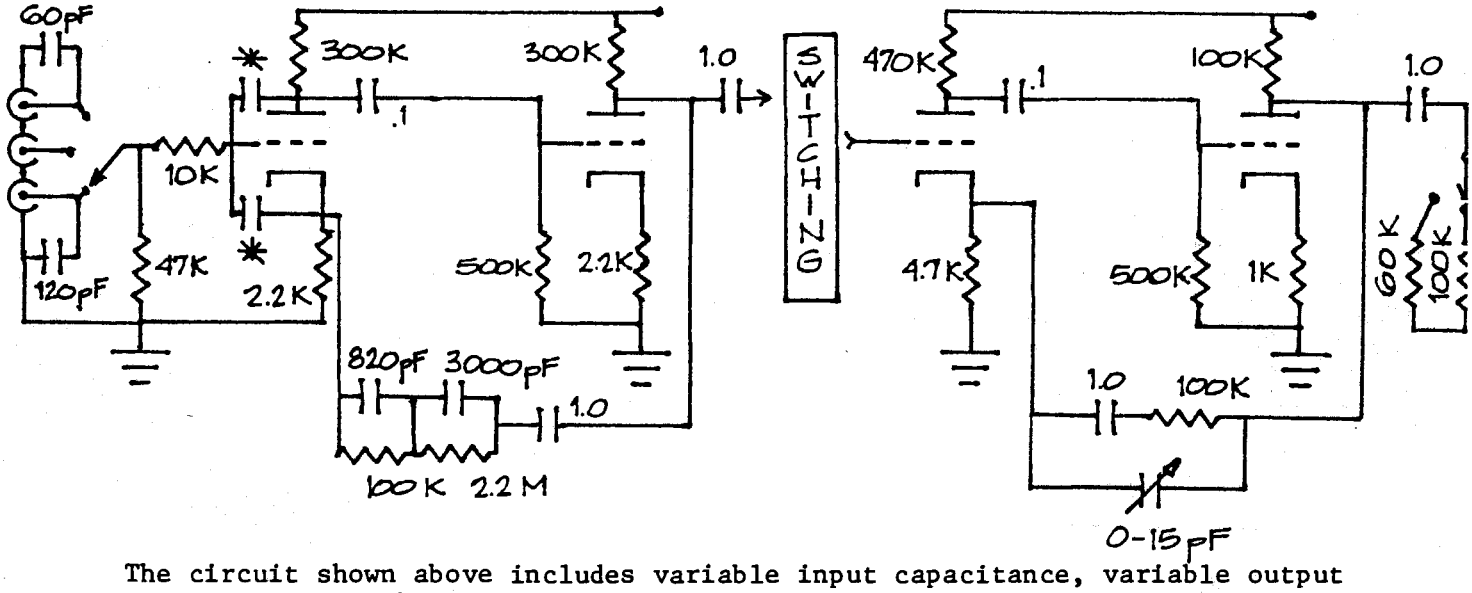

The circuit shown above includes variable input capacitance, variable output impedance, "split" blocking/feedback capacitors, and -- brand new -- variable feedback capacitance around the feedback resistor in the high level portion of the circuit. The advantage to this procedure is significant, since the optimum value of the small capacitor in the feedback loop must otherwise be determined by trial and error. We recommend use of a small ceramic or glass cylindrical capacitor.

The capacitance is determined by the percentage of the "piston" which enters the "cylinder". The relationship of these two plates is set by screwdriver adjustment, and the result is stable despite relatively high temperatures. The capacitor itself must be mounted in close proximity to the tube base, with wires running from the capacitor terminals to the appropriate pins of the tube.

The more conventional (and less expensive) mica wafer type is also suitable, and is sometimes easier to use. If small enough, it can be soldered directly to the tube socket, between the cathode of the first stage and the plate of the second. In the PAS, these solder points are pins 3 and 6. Such installation minimizes stray capacitance and permits extremely precise adjustment of feedback.

Regardless of the type of capacitor selected, its capacitance range should be from below one picofarad to above seven picofarads, and the unit must be suitable for operation with more than 400V across its plates. Obviously, a similar arrangement can be used in the RIAA circuit of the phono board. If the original circuit calls for 3000 pF, the builder can use 2900 pF plus a variable capacitor. This permits extremely precise tailoring of the RIAA curve.

The sonic result of such a feedback circuit in the high level stage is optimized rise time without ringing or overshoot on square waves. While the capacitor can be adjusted "by ear", it's much easier to use an oscilloscope. Simply inject a 3-10 kHz square wave and examine the result on the scope; adjust the capacitor to produce the sharpest possible square wave without a "bump" on the top of the leading edge.

The size of the final capacitors in each section of the circuit is determined partly by the expected use of the preamplifier. If it is to feed a solid state device, output impedance can be lowered by increasing that capacitance. Unfortunately, when capacitors exceed one microfarad in size, they seem to have an undesirable effect on high frequency reproduction unless they are shunted by a much smaller capacitor. We recommend anything from .01 to .1 mfd in parallel with the original component, as shown on the schematic below.

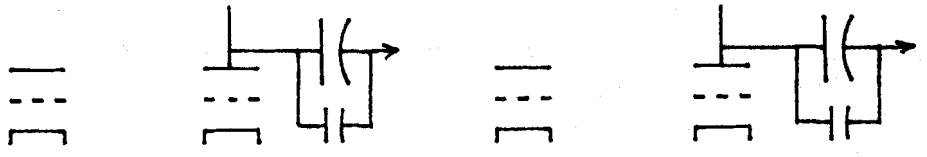

2. The Ultimate Cascode...

For the more adventurous, the Wallman Cascode presents a formidable challenge. To date, the most successful applications of this concept have looked like this:

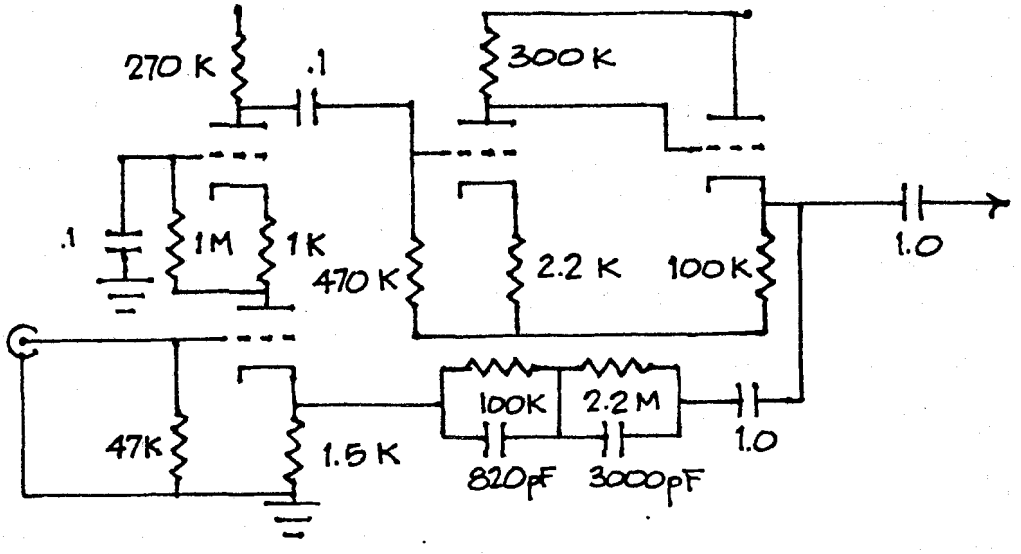

Note the small variations since the first Update. The size of the output capacitors, and the splitting of the output and feedback circuits at the cathode of the fourth tube, should be in accordance with the cascade circuit.

It now appears that the cascode, with the addition of another gain stage and cathode follower, is capable of producing outstanding sonic performance but with limited gain. One solution involves an increase of B+ to a bit less than 500V, which still permits use of readily available filter and decoupling capacitors. The cathode follower stage can be further improved by using a constant current device in place of the cathode resistor, as described later in this Update.

3. Output impedance and cathode followers...

A cathode follower of some sort is mandatory when a gain stage is to be fed to a relatively low impedance device, such as many solid state amplifiers. Unless absolutely necessary, however, no cathode follower should be used, since all such devices operate to the detriment of sonic quality. Conventional distortion and frequency response measurements are not sufficient to describe the effect of a cathode follower, which is subtle and seems to operate through the power supply. Deletion of the cathode follower, where possible, will usually provide a significant improvement in preamplifier performance.

The ARC SP3A-1 provides an excellent example of a fine preamplifier overburdened with cathode followers. The problem can be solved (again, assuming no impedance problems) in the following manner:

1. Disconnect C6 from the point where it takes the signal from the cathode of V3, and cut through the printed circuit which connects pin 6 of V2 with pin 2 of V3 (it's pin 1 of V2 and pin 7 of V3 for the other channel).

2. Wire C6 to the plate (pin 6 of L channel, pin 1 of right) of V2.

3. Cut through the printed circuit connecting pins 1 and 6 to the B+ supply, thus isolating V3 from the circuit, except for the filaments - which are <u>left on</u>.

4. Eliminate <u>two more</u> cathode followers and all tone control circuitry by first mounting two 1.0 (or larger) 600V capacitors to the chassis, between the circuit boards, on the left side of the unit. Use Dow or GE silicone adhesive.

5. Split off one pair of main output jacks - in the original unit there are two pair in parallel. After disconnecting one pair from the original circuit, wire two new lengths of co-ax to the RCA jacks. At the other end of the co-ax, expose the center conductor of each cable and wire it to one of the new capacitors. The co-ax should be grounded only at the end nearest the rear panel.

6. Run a piece of insulated wire from the capacitor connected to the LEFT output jack to pin 1 of V5, and another piece from the other capacitor to pin 6.

And for further sonic improvement of the SP3A-1:

1. Replace C47 (5pF) with a variable capacitor and tune for best high end.

2. Replace C39 with solid wire.

One pair of output jacks will be high impedance - the other pair remain low.

If no auxiliary equipment is to be used in the tape loop, one might eliminate the cathode follower in the phono circuit. If both these options are selected, the final result will look much like the Ultimate Cascade circuit advocated by us and by many readers, but will benefit from the enormous capacity and stability of the original ARC power supply, and the high quality ARC potentiometers and switches.

4. Tape loops...

The vast majority of tape loops are wired to impose an extra load on the phono stage regardless of the position of the "Monitor" switch. It's a relatively simple matter to replace the original switch with a four pole unit, to ensure that the phono stage "sees" only subsequent stages, unless the switch is in the MONITOR position. The sketch below shows the difference:

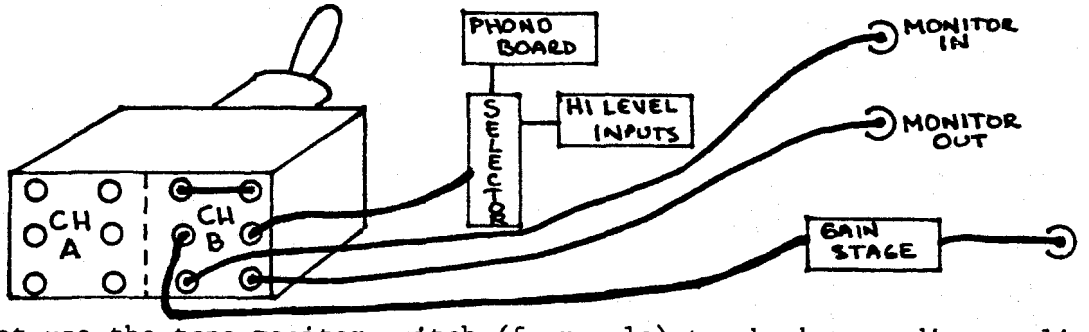

One cannot use the tape monitor switch (four pole) to check recording quality (by switching from SOURCE to TAPE), since the SOURCE position disconnects the unit from the tape recorder. Instead, use the similar switch provided on most recorders. Auxiliary equipment, such as dynamic expanders, would be perfectly compatible with this suggested change.

5. The Marantz Model 7...

The delightful response by Mr. Sol Marantz to the inquiry of an Absolute Sound reader has prompted many questions by our readers. We heartily endorse Mr. Marantz' recommendations, which will certainly restore (and even improve upon) the original performance of his extraordinary products. Some readers wish to go further, however, and are willing to give up the signal processing capability of the Marantz 7 for the sake of absolute sonic performance. For the benefit of that group, the following recommendations are offered:

a. Increase power supply capacitance by at least 100 mfd at the phono stage B+ tap. A Sprague TVA 1720 fits well, and provides 200 mfd @ 450V. Strategically placed chokes will work well also.

b. Eliminate all electrolytic (tantalum or otherwise) capacitors between any cathode and ground.

c. Replace the RIAA circuit with that recommended in the Manual.

d. Provide a tone control and/or cathode follower bypass, if the unit is to be used with a vacuum tube power amplifier.

6. Selection of 12AX7's for preamplifier applications...

ADI is initiating a local study in which all readers may participate, to determine the characteristics of the several "good" tubes used in various circuits. To date, we have learned that the Telefunken sounds best in the cascade circuit, and that a combination of Amperex and Telefunken works best in the cascode circuit. We'd like to hear from our readers on this important issue, and will publish the results of the study in the next Update. The factors which bear on the issue include noise, treble characteristic, dynamic range, smoothness and durability.

7. Evolution of the strain gauge power supply...

It's relatively easy to eliminate the phase problem of the tube circuit suggested for use with strain gauges. Build up a positive/negative supply, as shown below, and capacitively couple the cartridge beams to the grids of the first stages. Use a large capacitor, since impedances demand it.

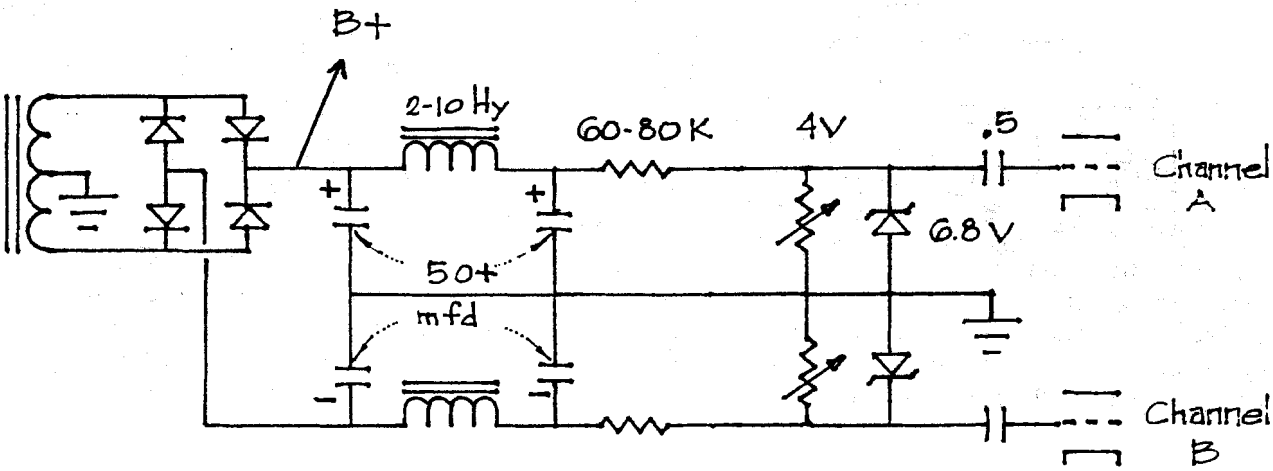

In building this circuit, remember that two electrolytics are installed with the positive side grounded.

For builders who are interested but who don't have a Win or Panasonic cartridge, it's worth noting that Win Laboratories is now introducing a new unit, with beams using more advanced technology and a new solid state power supply/preamp. Preliminary evaluation indicates that the 6 kHz peak, which plagued the original offering, is absent, and that the cartridge is a spectacular performer.

POWER AMPLIFIER CIRCUITRY

1. The ultimate drive circuit... offered by Fred Schultz, of ADI.

Audio Dimensions has long been experimenting with a really new means of voltage amplification and phase inversion. While differential amplifiers have been used in test equipment for many years, it's only recently that the audio industry has tried to apply this technology to the amplification problem. ADI recommends the use of a constant current device in conjunction with the differential amplifier, as shown on the following page.

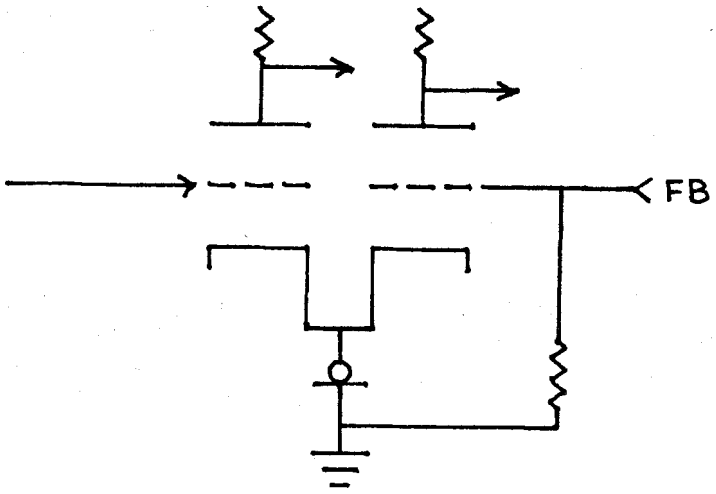

This basic unit will both amplify and invert phase - accurately! In some installations, it might be possible to use one 12AX7 (or a similar dual triode) as the only tube preceding the output section. Most likely, however, one or two problems will arise. First, gain might be insufficient to drive the output tubes. If the input signal is reasonable (1V or more) and the output stage uses relatively sensitive tubes, like the 8417, there might be sufficient gain. Impedance matching then could become a problem. The dual triode "sees" a load resulting from the resistors between the grid of the output tubes and the bias voltage source.

The first problem, that of gain, can be solved by adding a single gain stage:

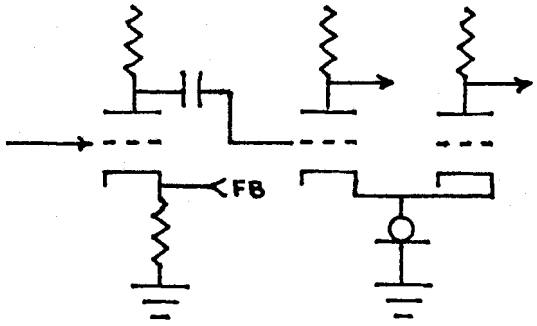

Of course, this necessitates elevation of the overload point of the differential amplifier.

The second problem can be dealt with by adding a cathode follower after each half of the diff-amp. Another dual triode, then, will be required:

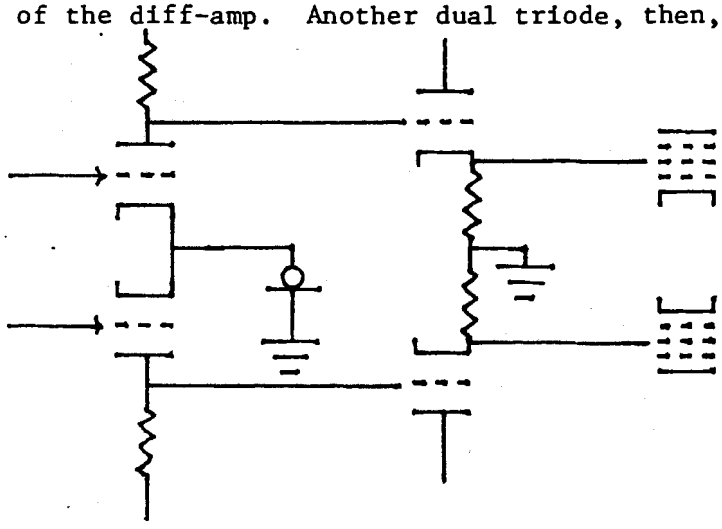

Study this circuit and decide whether you want to build it. The next Update will include Mr. Schultz' best, which provides a clever means of achieving AC balance plus extremely stable, wide bandwidth operation - with very little feedback. If there's enough interest, we'll offer a kit (for the MKIII) with a printed circuit board.

PARTS AVAILABILITY

We have been notified by Dynamic Specialties that they are now stocking a complete selection of audio tubes, including Telefunken, Amperex, Genalex, Sylvania, GE and more. We have reviewed their product sheet and feel that their prices are fair. Examples are given below:

TELEFUNKEN		AMPEREX		GENALEX	
12AX7	$2.75	12AX7	$2.35	KT 66	$13.50
EL34	5.95	EL34	5.90	KT 88	18.00
6BQ5	3.10	7199	4.80		

A card to this firm will get you their full price sheet, and establish contact with one of the leaders in vacuum tube audio equipment.

DYNAMIC SPECIALTIES
2261 Spring Street
Redwood City, CA 94063

ADI is pleased to announce availability of the Model One preamplifier, which incorporates the 'ultimate' circuit in brand new Dyna hardware. The unit is fitted with a black faceplate and black knobs, and comes with a three year warranty. $425 in California, Illinois, and Indiana.

The vacuum tube sub-preamplifier described in this Update is available as the ADI Model Two, factory direct, at $200.

Though ADI makes every effort to keep Update readers informed of new technology in vacuum tube audio, all rights to commercial application of Update material are reserved for ADI exploitation.

Audio Dimensions
8898 Clairemont Mesa Blvd. #K
San Diego, California 92123

Audio Dimensions, Inc.
8898 clairemont mesa blvd. #k
san diego, california 92123

The Audio Dimensions Parts Bin can provide many tube-peculiar components at very reasonable prices. The sources of these items are identified by code letter: N=new, S=surplus, U=used, but serviceable.

TUBES

6AN8	IC	3.00 (N)
7199	IC	3.50 (N)
12AX7	Telefunken	2.25 (N)
	Siemens	2.50 (N)
EL34	Amperex pr, matched	10.00 (N)
6550	Mullard	10.00 (N)
KT88	Genelex MPr	30.00 (N)

ELECTROLYTICS

100 mfd @ 450V	2.50 (N)
200 mfd @ 450V	4.50 (N)
530 mfd @ 400V	4.30 (S)
800 mfd @ 450V	6.00 (S)
1000 mfd @ 400V	6.00 (S)
1000 mfd @ 450V	8.00 (S)
8200 mfd @ 25V	1.50 (S)

MYLAR CAPS

3.0/600V	2.00 (S)
2.0/600V	2.00 (N)
1.0/400V	.50 (N)
1.0/100V	.30 (N)
.1/600V	.25 (S)
.1/400V	.30 (N)
.01/1000V	.25 (S)

PRECISION CAPS (all pF)

3000, 825, 750, 250, 120, 60, 24, 18, 10

above 150 pF	.25 (N)
below 150 pF	.15 (N)

TRIMMER (varcap)

1-15 pF 1.00 (N)

CHOKES

7 Henry, 2k ohms, 15 ma max 1.50 (U)

TRANSFORMER

Dynaco PAS 16.50 (N)

FACEPLATES (PAS CHASSIS)

Original Dyna 4.00 (N)

Mod Dyna PAS, no tone controls or scratch filter; gold, black silk screened legend- 12.00 (N)

RESISTORS - all .5W unless marked otherwise

METAL FILM	CARBON FILM	NON-IND WIRE
60, 1k, 1.21k, 1.5k, 3.3k, 4.75k, 10k, 11k, 13.3k, 14k, 28k, 43k, 48.7k, 62k, 110k, 178k, 196k, 274k, 287k, 300k, 316k, 909k	47k 5% 82k 1% 464k 1% 650k 1% 1m 5% 4.7m 5% ¼w	300k 1% 500k .1%

.25W: 619, 1690, 2150, 3160, 12.1k, 34.8k, 750k, 2.2m

PRICES

All MF ½W	.15 (S)
MF ¼W	.10 (S)
All CF 1%	.15 (S)
CF 5%	.05 (N)
Wire wound	.40 (S)

PARTS BAGS FOR DYNA MODS ..... $50 each.

With 90% or more of the caps, chokes, resistors, etc. new tubes (less rectifiers). PAS kit includes new gold faceplate; amp kits have bias meters.

DYNAKITS	LIST PRICE	ADI PRICE
PAS 3X	$164	129
STEREO 70	174	138
MKIII	174	138
MKVI	435	349
SE-10 EQUALIZER	254	197
AF-6 AM/FM TUNER	274	217
FM-5 FM TUNER	204	156
RMA 19" RACK MOUNT	43	39

PLEASE WRITE FOR PRICES ON OTHER DYNAKITS, WOOD CASES, AND FACTORY WIRED COMPONENTS. ADI ALSO HAS A LIMITED NUMBER OF USED DYNA AMPLIFIERS AND PREAMPLIFIERS FOR SALE.

DYNA COMPONENTS ARE SHIPPED FREIGHT COLLECT.

ON PARTS ORDERS, PLEASE ADD $2 TO THE TOTAL TO COVER POSTAGE AND HANDLING.

CALIFORNIA RESIDENTS PLEASE ADD 6%